WIEFP 2022

NOVEMBER 22-23 ▪ SÃO PAULO ▪ BRAZIL

DIGITAL HYDRAULIC ACTUATORS: A RESEARCH OVERVIEW FOR AIRCRAFT CONTROL SURFACES

Dimitri Oliveira e Silva

PhD Student (LASHIP/UFSC)

6th Workshop on Innovative Engineering for Fluid Power
November 22-23 – São Paulo – Brazil – 2022

Agenda

- Introduction
- Digital Hydraulics
- Digital Hydraulic Topologies
  - Digital Hydraulic Actuator
  - Digital Electro Hydrostatic Actuator
  - Variable Speed Digital Electro Hydrostatic Actuator
- Virtual test bench
- Previous results
- Conclusion

Introduction

- Brazil/Sweden bilateral collaboration
  - New actuators for flight control surfaces
  - Design, modeling and simulation
  - Experimental tests and proof of concept

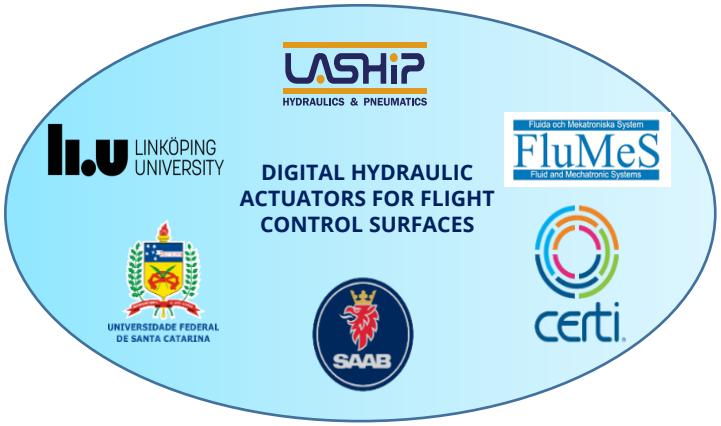

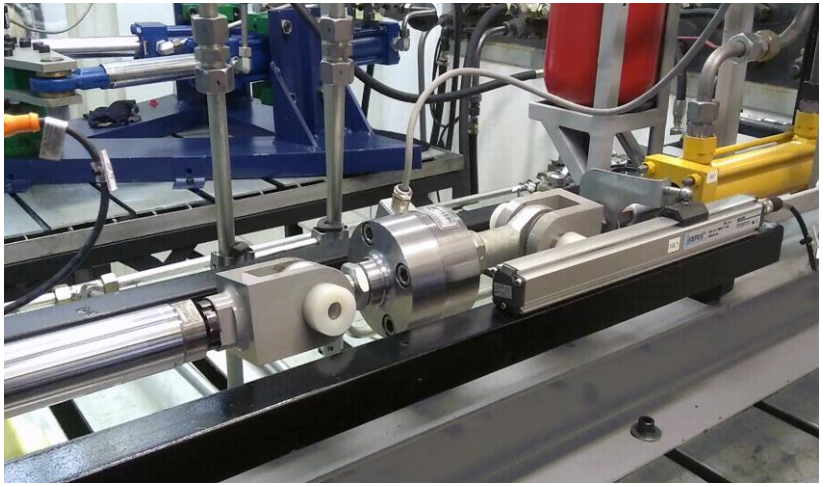

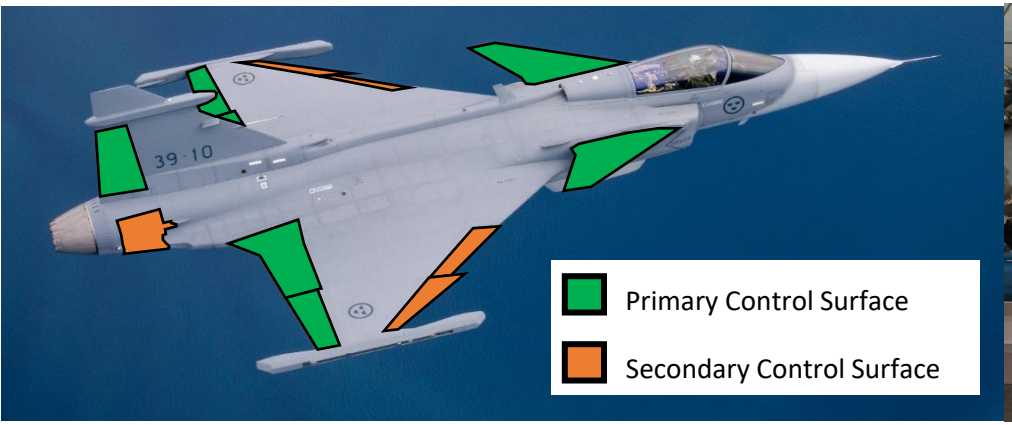

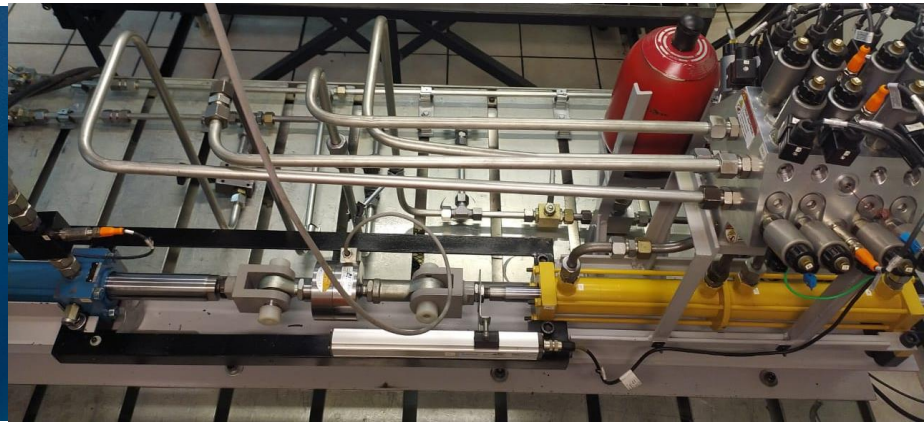

Digital Hydraulics

Concept:
"Digital Fluid Power means hydraulic and pneumatic systems having discrete valued component(s) actively controlling system output." (Linjama, 2011).

Features

- Improve energy efficiency
- Avoid throttling control
- Simple components
- Relative low-cost components
- Smart and flexible control

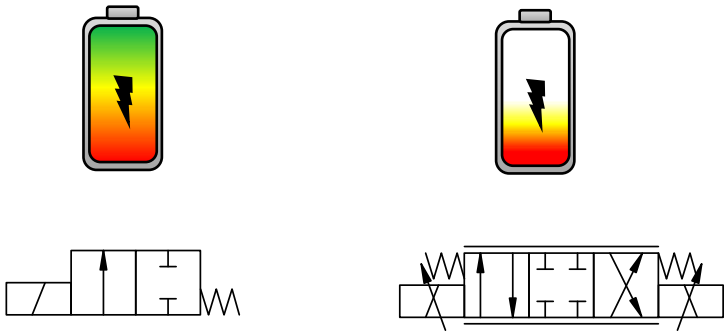

$ 20~40 × $

10101001101010
01010010100101
01001010010101
11001010101001

- Digital Hydraulic Actuator - DHA

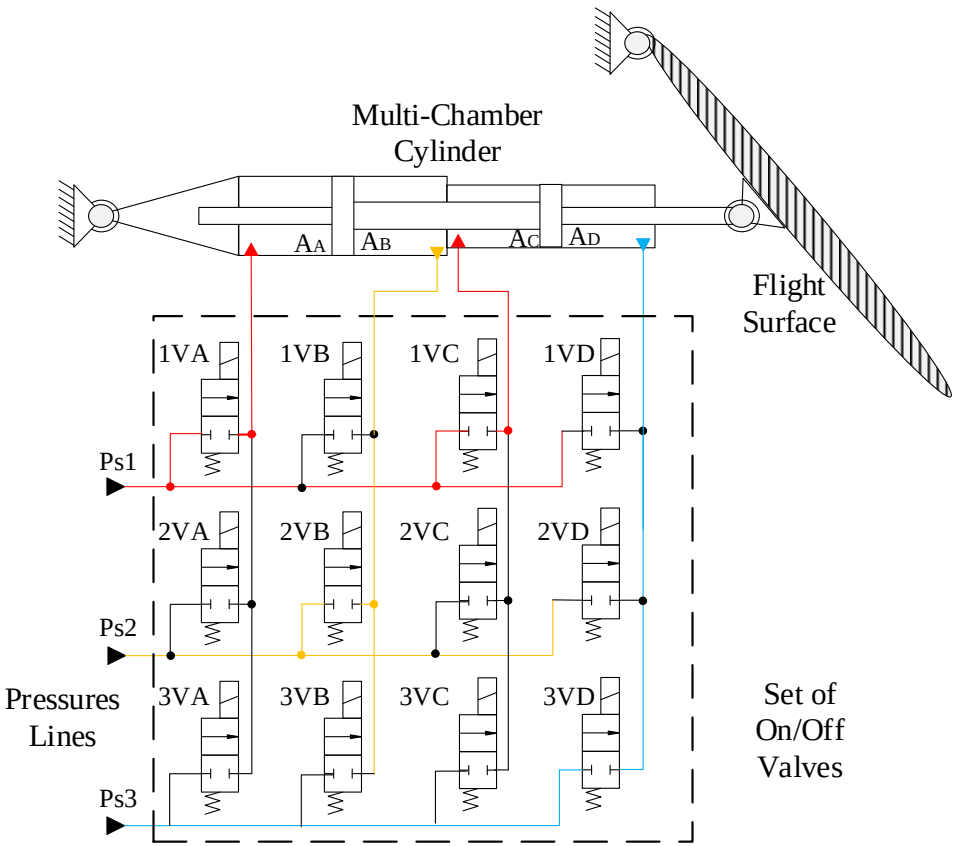

Secondary Control Strategy
Force control

3 pressures sources

4 cylinder chambers

81 discrete levels of force

- Digital Electro Hydrostatic Actuator - DEHA

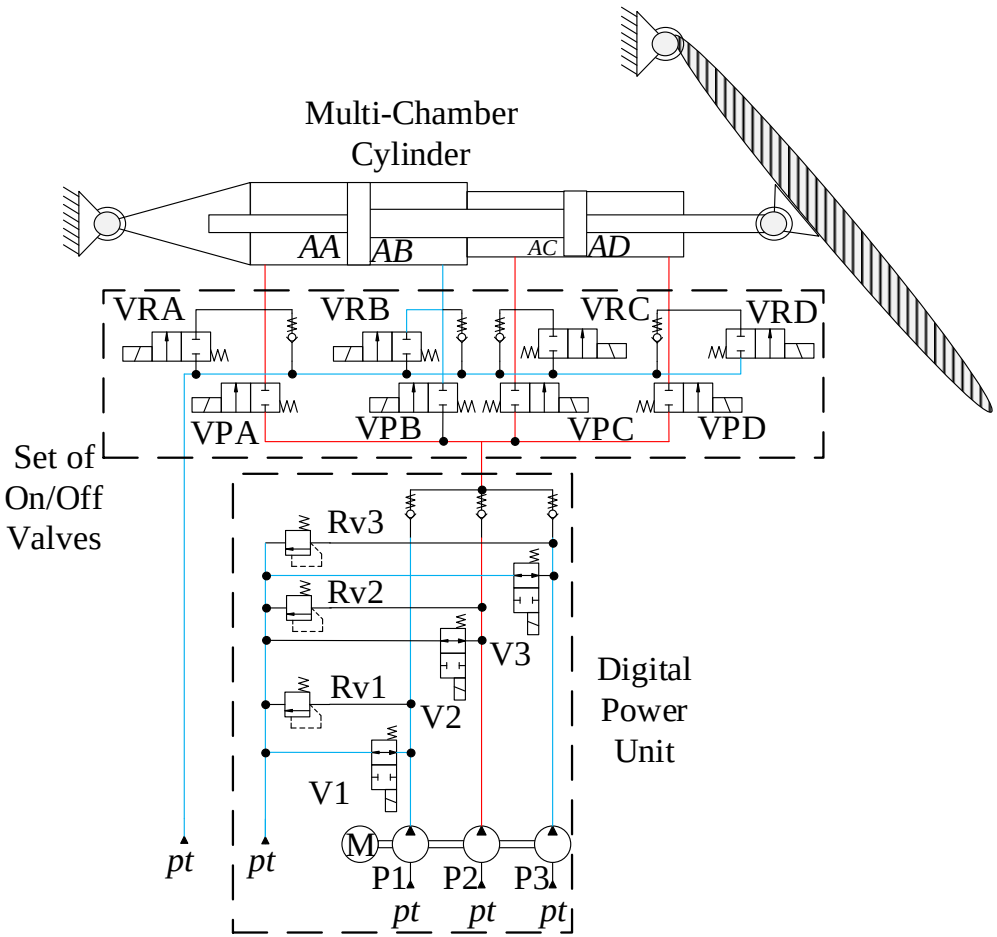

Constant speed

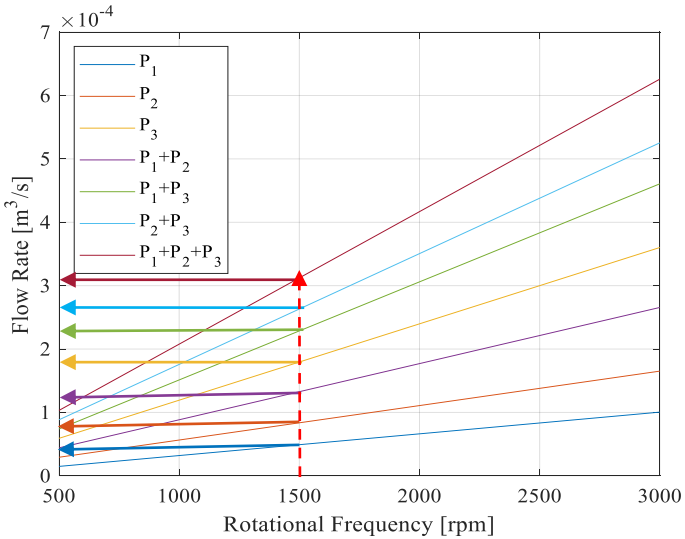

One flow rate for each pump unit combination

3 pumps

4 cylinder chambers

Regeneration

43 discrete values of velocity

- Variable Speed Digital Electro Hydrostatic Actuator - VSDEHA

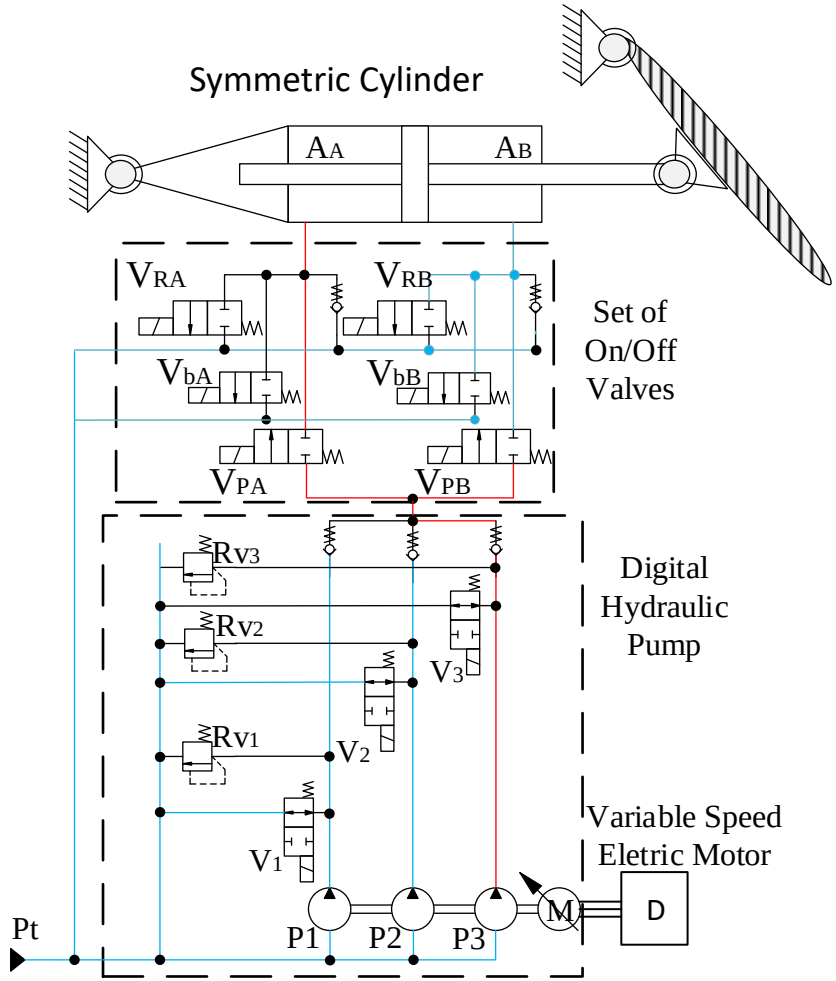

Variable speed

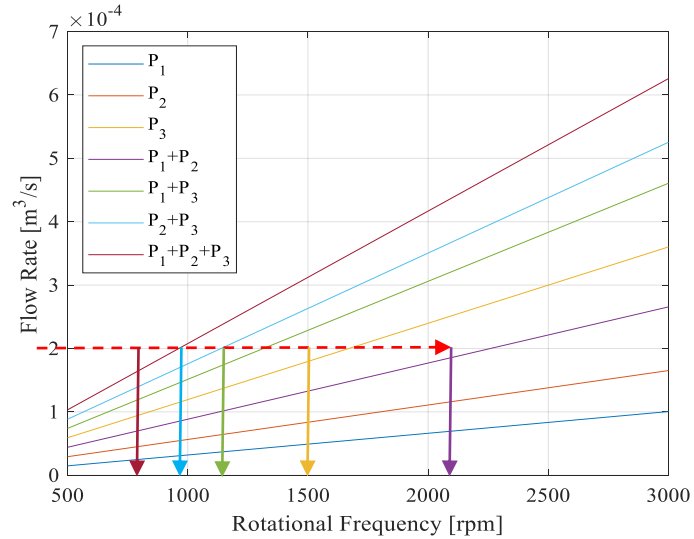

Different pump unit combinations for a same flow rate

Power on demand
Continuos flow rate control

Resume of the main characteristics

Characteristic	DHA	DEHA	VSDEHA
Controlled hydraulic variable	Pressure	Flow rate	Flow rate
Controlled mechanical variable	Force	Velocity	Velocity
Hydraulic supply unit	Not considered	Digital Hydraulic Pump	Digital Hydraulic Pump
MEA concept	Not considered	Considered	Considered
Electric motor control	Not considered	Fixed angular speed	Variable angular speed
Cylinder valve commutation	To change force and direction	To change velocity and direction	To change direction
Pump valve commutation	Not considered	To change the pump unit combination	To change the pump unit combination
Number of forces or velocities	Limited by the number of pressure lines and cylinder chamber combinations	Limited by the number of discrete flow rate and cylinder chamber combinations	Limited by the angular speed range available for each pump unit combination

Aero-Data Model in a Research Environment (ADMIRE)

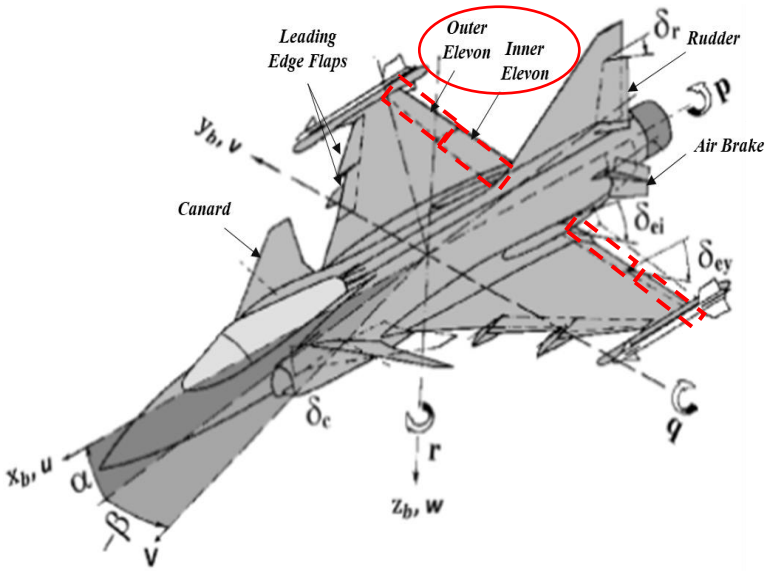

MatLab/Simulink

Admire Actuator Model Block Diagram

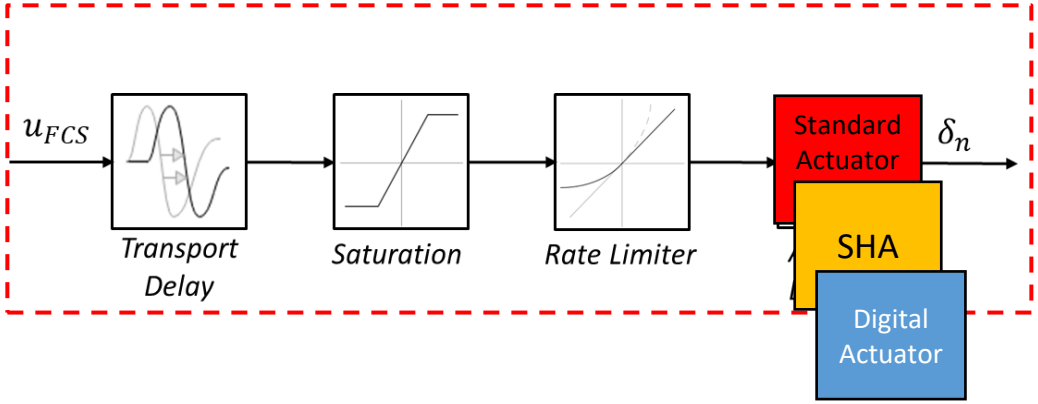

- **Standard ADMIRE Actuator Model**
  - **20ms** of transport delay (FCS computer effect);
  - **Saturation and Rate Limiter** (Prevent fast movements);
  - ADMIRE actuators: **1st order with τ = 0.05s.**

Virtual Test Bench

Design + Modelling + Simulation + Creative Leisure

Hopsan + **MatLab/Simulink** + **FlightGear**

Approach mission

Roll-turn mission

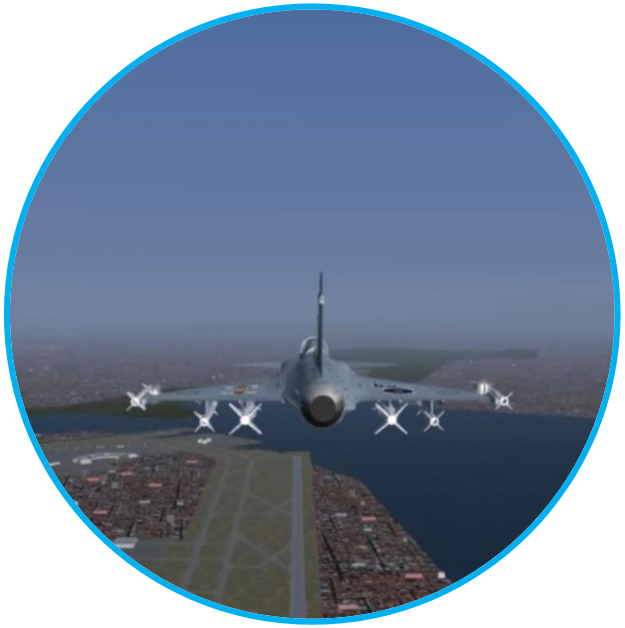

Longitudinal Mission

Previous Results

Energy evaluation on the virtual test bench

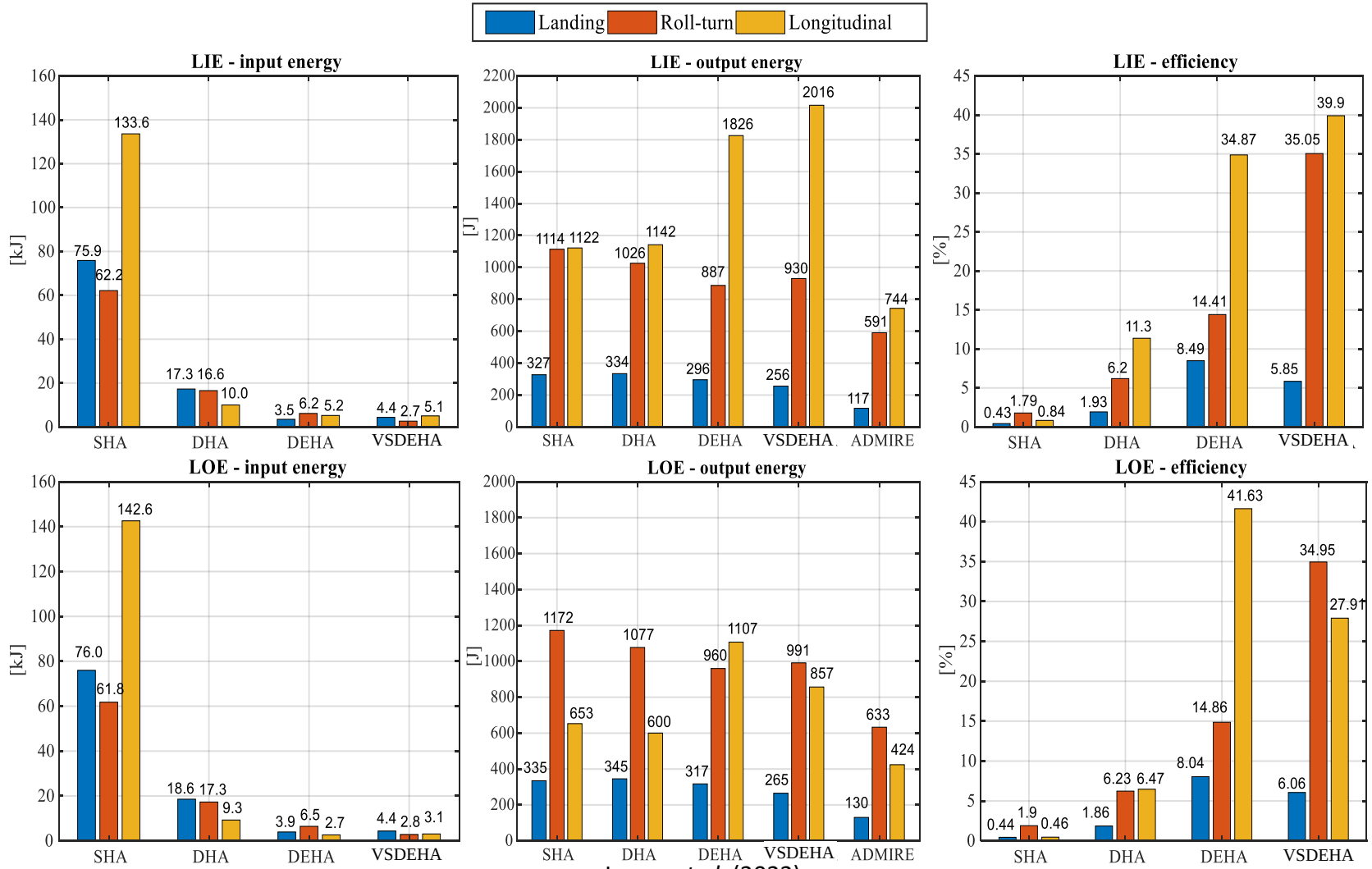

Lopes *et al.* (2022)

Conclusions

- Status of the research line
  - Proof of concept for DHA and DEHA topologies is finished;
  - Finishing the proof of concept of the VSDEHA;
- About aircraft application
  - Size and weight: have to be evaluated with high-level components;
  - Redundancy and reliability: the flexibility of the control strategies and arrangement is an advantage of digital hydraulics;
  - Possibility to use the DHA as a backup system;
  - Possibility to use the DEHA and VSDEHA as a decentralized system;

WIEFP 2022

NOVEMBER 22-23 ▪ SÃO PAULO ▪ BRAZIL

DIGITAL HYDRAULIC ACTUATORS: A RESEARCH OVERVIEW FOR AIRCRAFT CONTROL SURFACES

Dimitri Oliveira e Silva

PhD Student at Federal University of Santa Catarina

Professor at Federal University of South and Southeast of Pará

dimitri.oliveira@unifesspa.edu.br

CISB Centro de Pesquisa e Inovação Sueco-Brasileiro — An Open Innovation Arena between Brazil and Sweden

CNPq Conselho Nacional de Desenvolvimento Científico e Tecnológico

CAPES

SAAB

LINKÖPING UNIVERSITY

Federal University of Santa Catarina

UNIFESSPA Faculdade de Engenharia Mecânica — Federal University of South and Southeast of Pará