Advanced Modeling Techniques and Innovations in External Gear Pumps

WIEFP 2016
OCTOBER 25-26 · FLORIANÓPOLIS - SC · BRAZIL
A Swedish - Brazilian Initiative

Andrea Vacca

Associate Professor

Maha Fluid Power Research Center

Purdue University, West Lafayette, IN (USA)

https://engineering.purdue.edu/Maha/

email: mahaav@ecn.purdue.edu

avacca@purdue.edu

Contents

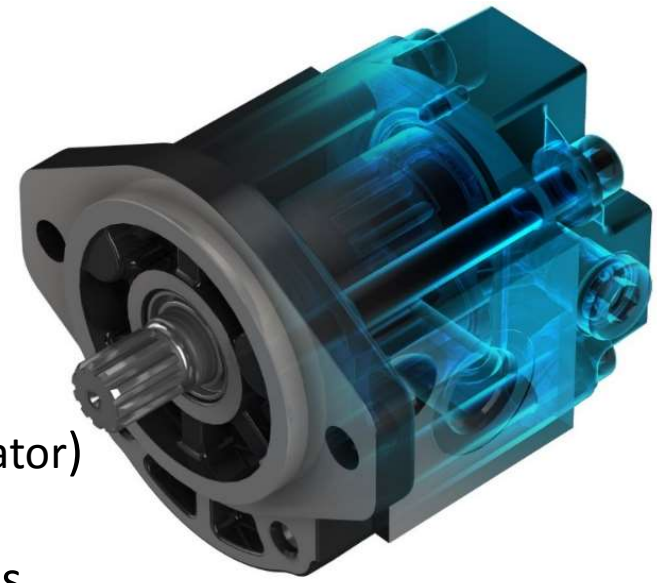

1. Research on External Gear Pumps

2. External Gear Machines modeling

   HYGESim (**HY**draulic **GE**ar machines **Sim**ulator)
   - fluid dynamic features
   - micro-motions of internal parts
   - noise emissions
   - model validation

3. Model Applications and Innovations in External Gear Pumps

   - Variable delivery flow unit
   - Wedge gear
   - Miniature gear pump for compact electro hydraulic actuators
   - Novel gear profiles for reduced fluid borne noise

Motivations

- Ivantysynova, 2001

Positive displacement machines

Piston Machines

Axial Piston Machines

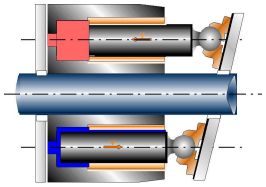

Swash Plate Machines

Bent Axis machines

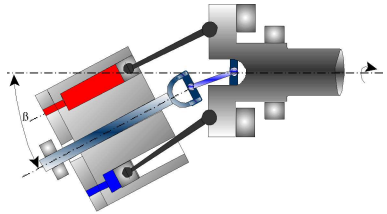

In-line Piston Machines

Radial Piston Machines

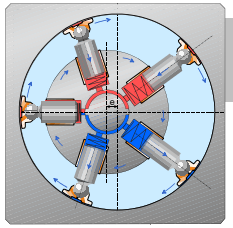

with external piston support

with internal piston support

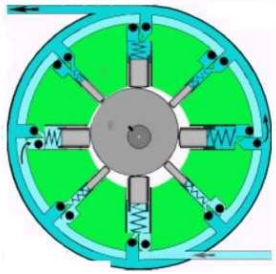

Gear Machines

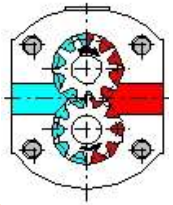

External Gear

Internal Gear

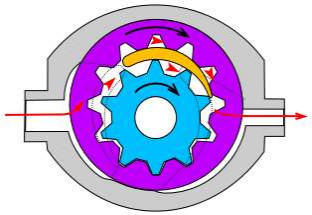

Annular Gear

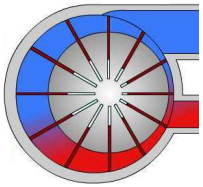

Vane Machines

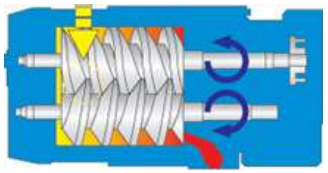

Screw Machines

Motivations

External gear machines

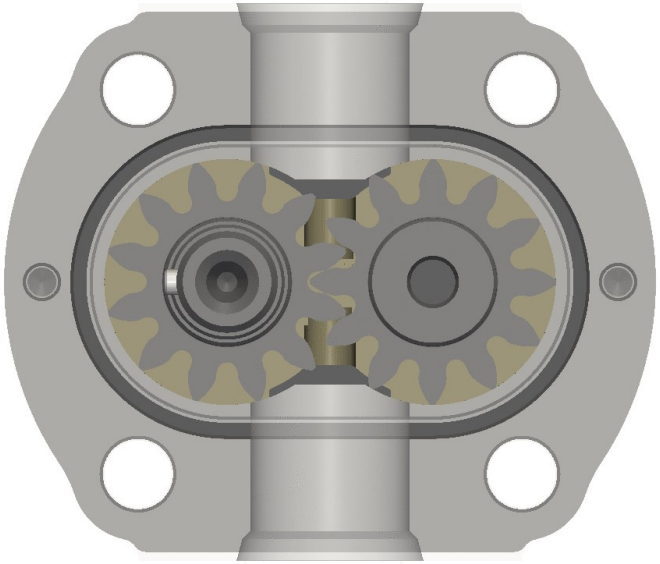

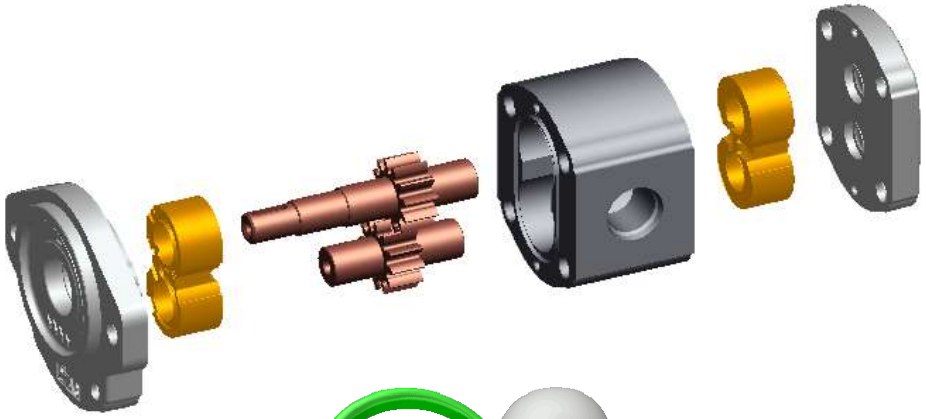

Pros.

- Low cost
- Compact package
- Tolerance to aeration/cavitation
- Low fluid borne noise potential

Cons.

- Fixed Displacement
- Efficiency

Past Research Effort

- **Geometrical features and flow pulsations**
  - Beecham, 1946
  - Bonacini, 1961
  - Castellani, 1967
  - Fielding et.al 1977
  - Manring, Kasaragadda, 2003
- **Inter-teeth meshing pressure**
  - Mancó, Nervegna, 1989
  - Eaton, Edge, 2001
  - Zardin et al. 2004
  - Borghi et al., 2006
- **Variable displacement**
  - Yang , Zhong , 1987
  - Bussi, 1992
  - Hoji et al., 2008
- **Gear machine simulation models**
  - Mancó, Nervegna, 1993
  - Zardin, Borghi, 2008
  - Falfari, Pelloni, 2007
  - Edge et al., 2008
  - Wustmann et al., 2008
  - Codina et al, 2002-2015
  - Mucchi et al., 2012-2016
- **Gear profile optimization**
  - Nagamura et al., 2004
  - Kollek et al. 2009
  - Wang et al. (2011)
  - Huang, Chen, 2008
- **Noise emissions**
  - Latzel, 2012
  - Mucchi, 2010
  - Fiebig, 2010

HYGESim (HYdraulic Gear machines Simulator)

Structure of the model

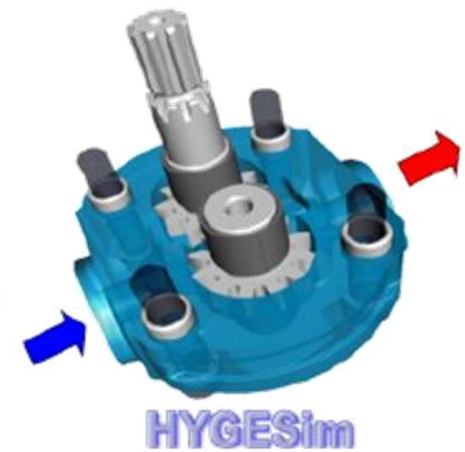

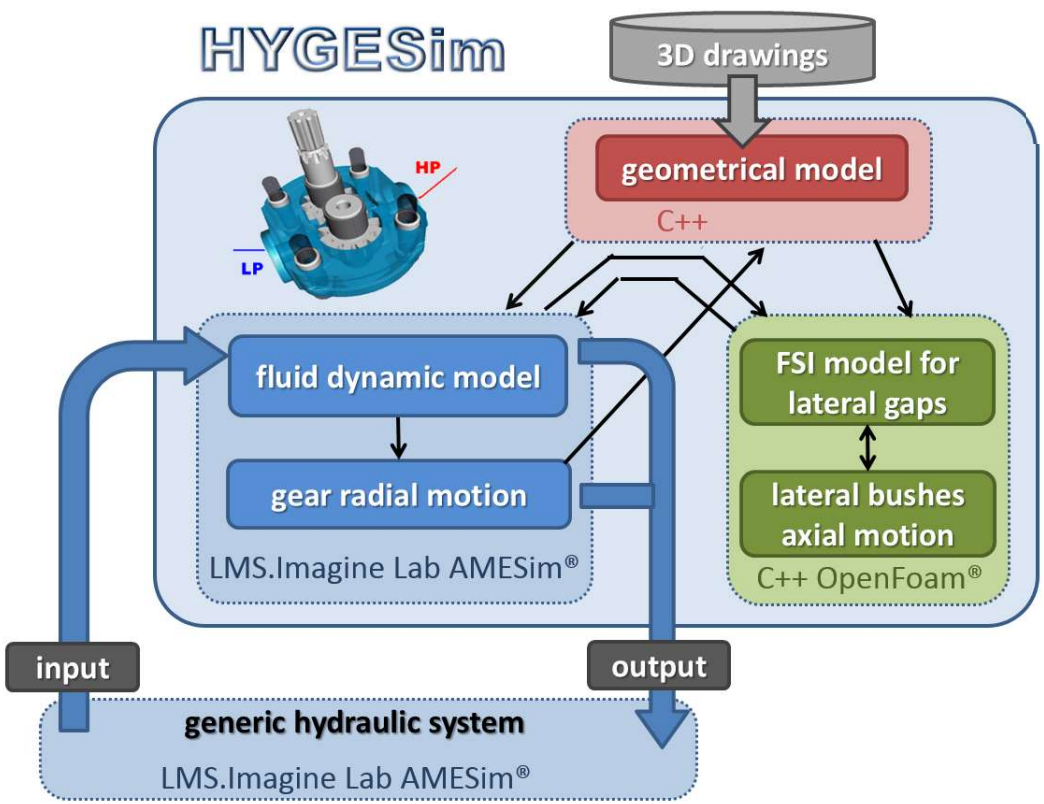

HYGESim (HYdraulic Gear machines Simulator)

Geometrical model

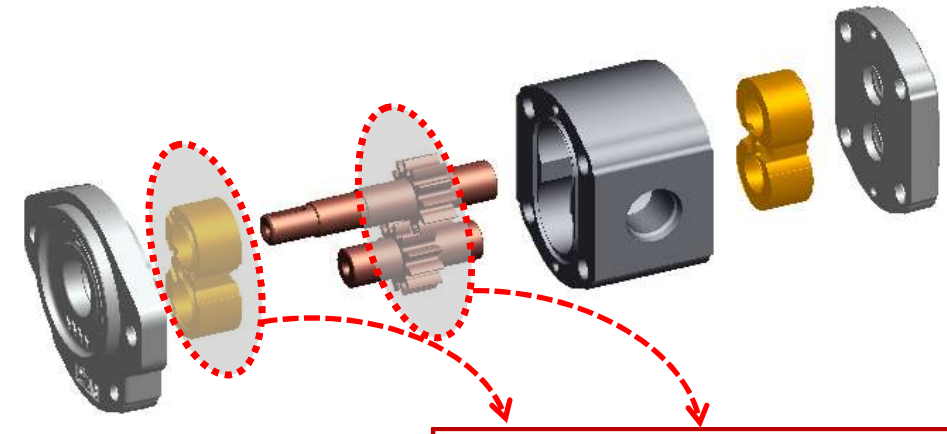

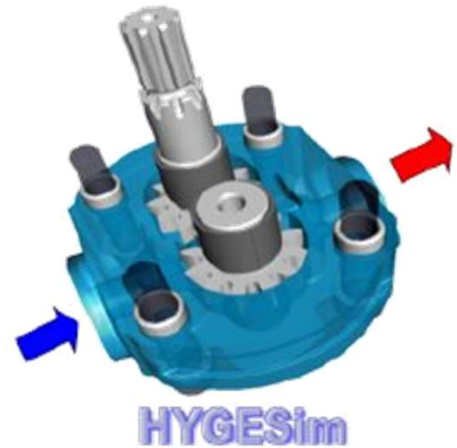

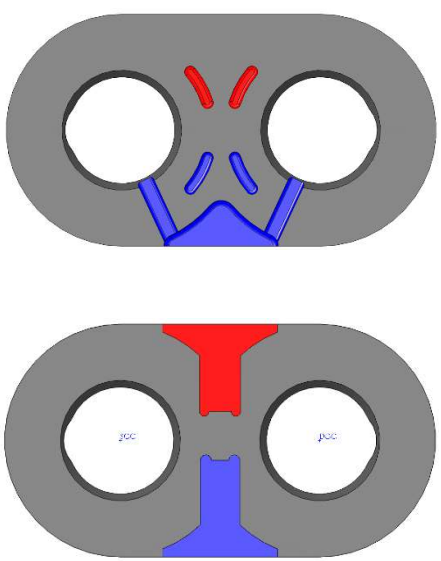

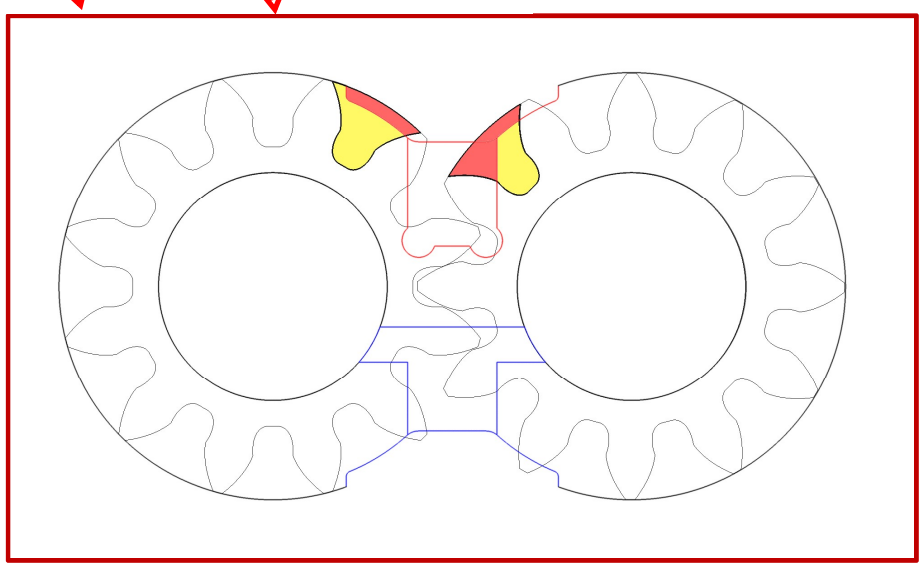

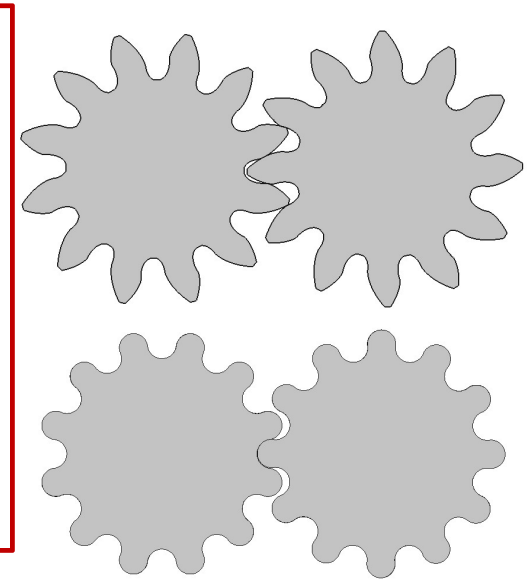

HYGESim (HYdraulic Gear machines Simulator)

Main flow model

- ✓ Lumped parameter model
- ✓ Simplified full cavitation model

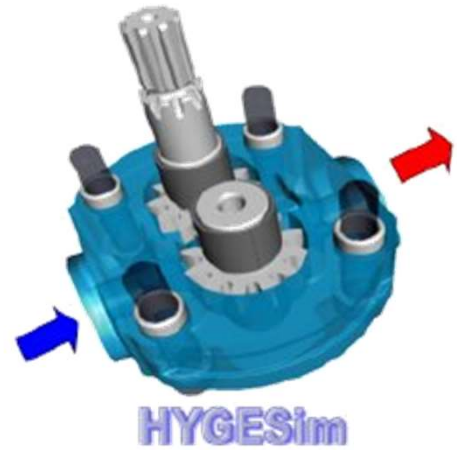

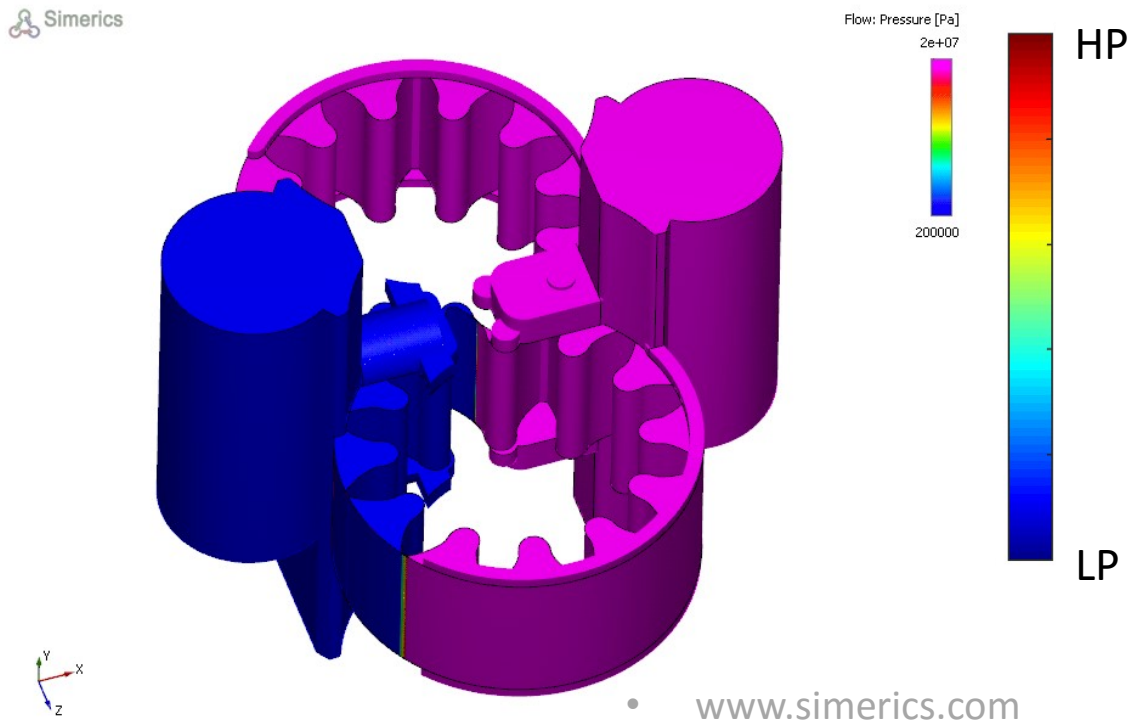

- www.simerics.com

HYGESim (HYdraulic Gear machines Simulator)

Main flow model

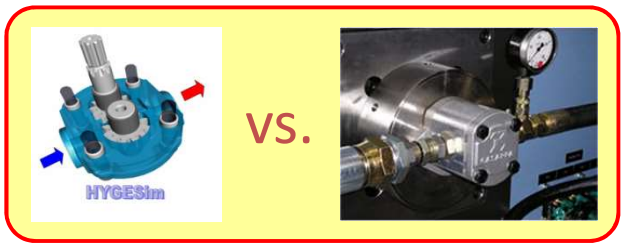

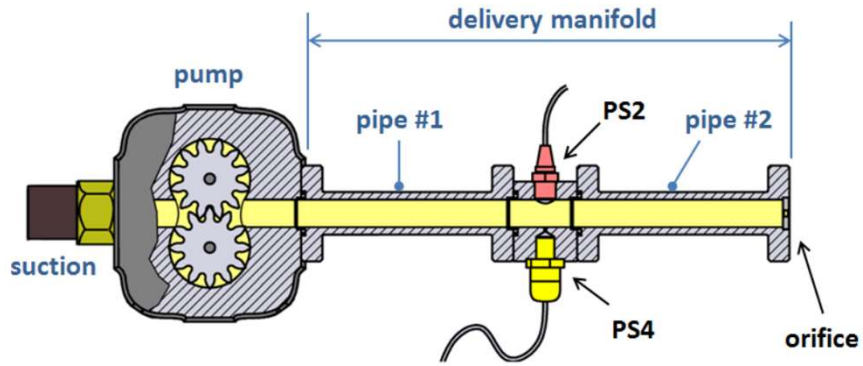

delivery pressure ripple apparatus

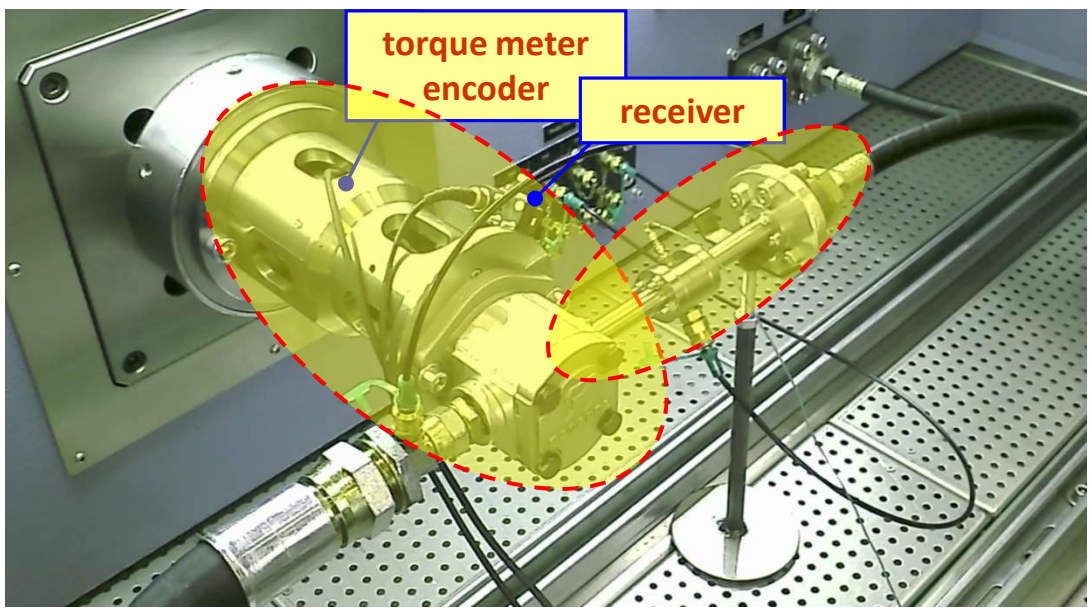

HYGESim (HYdraulic Gear machines Simulator)

Main flow model

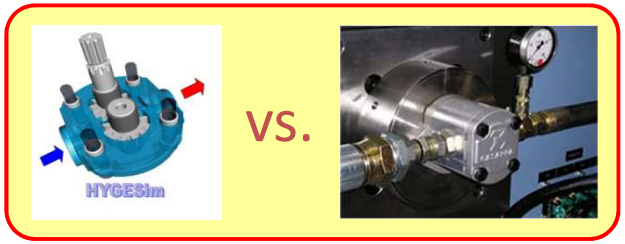

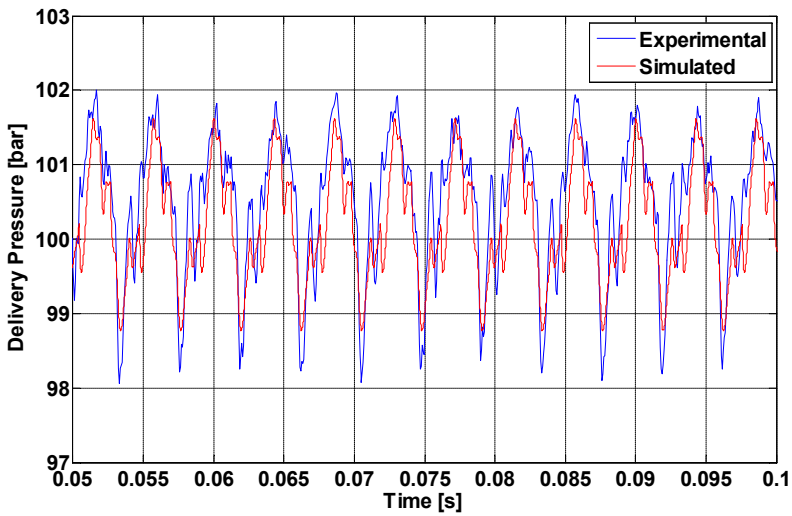

outlet pressure pulsations

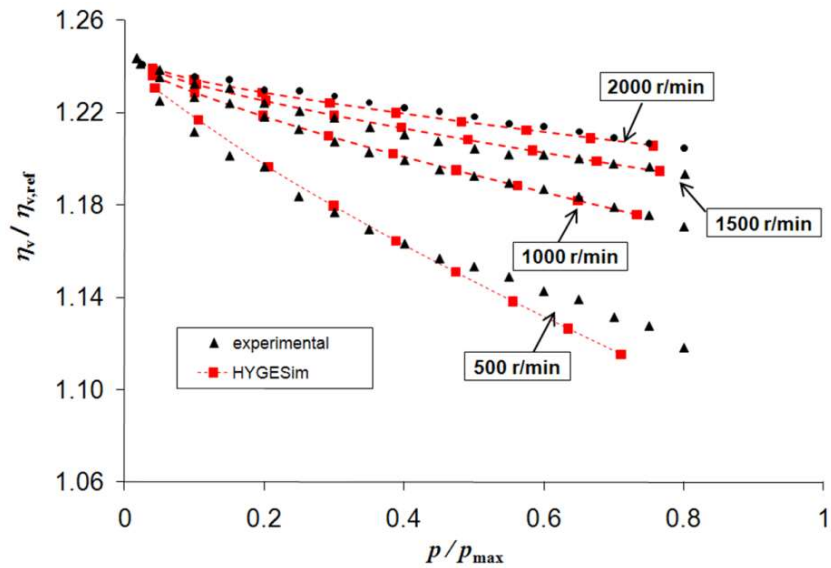

volumetric efficiency

HYGESim (HYdraulic Gear machines Simulator)

Main flow model

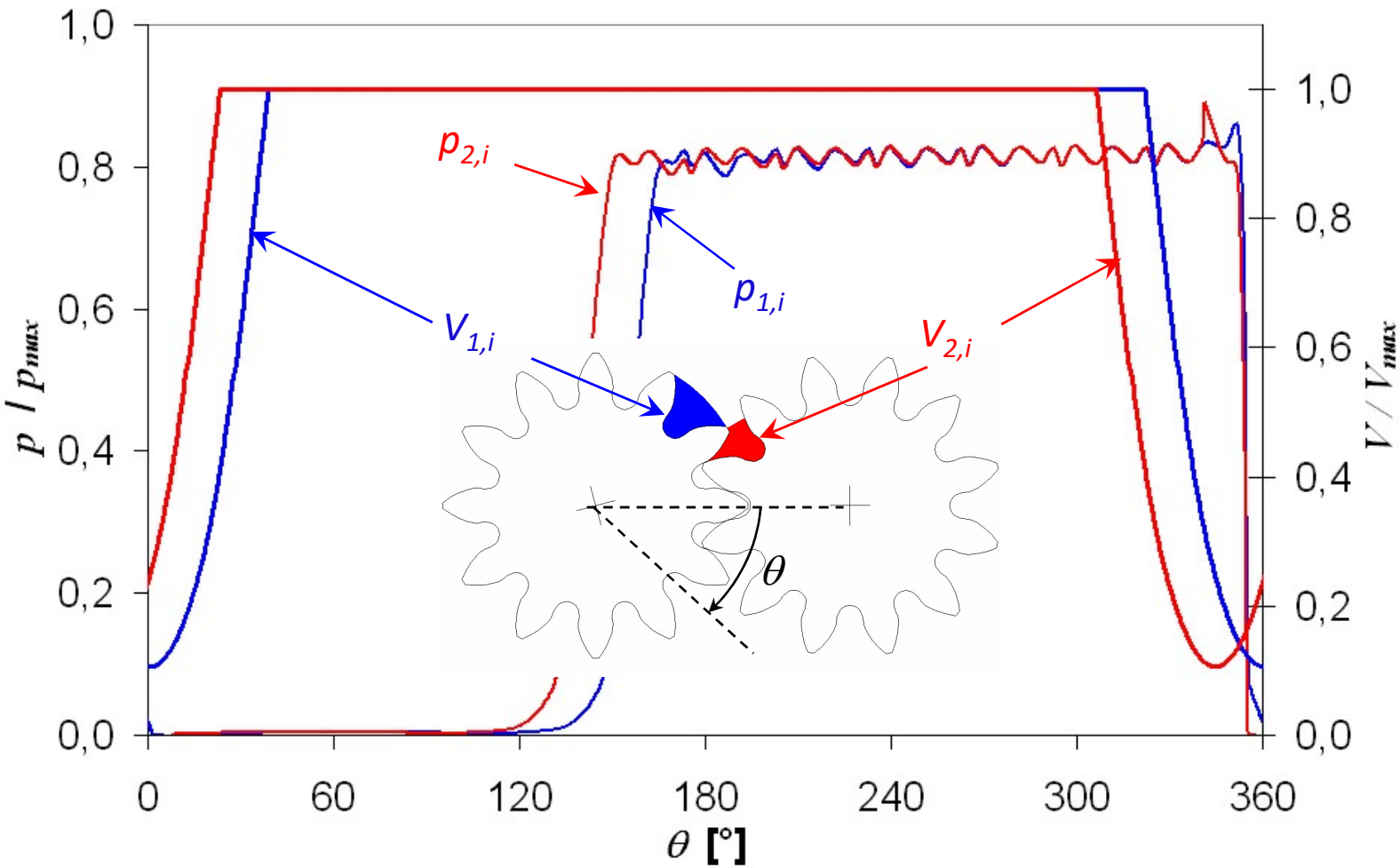

HYGESim (HYdraulic Gear machines Simulator)

Main flow model

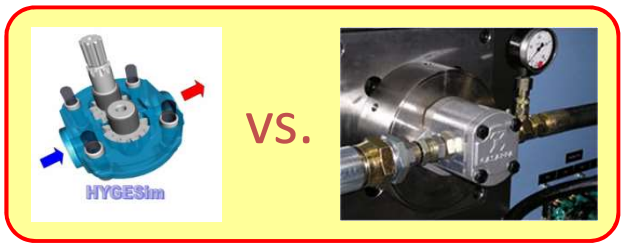

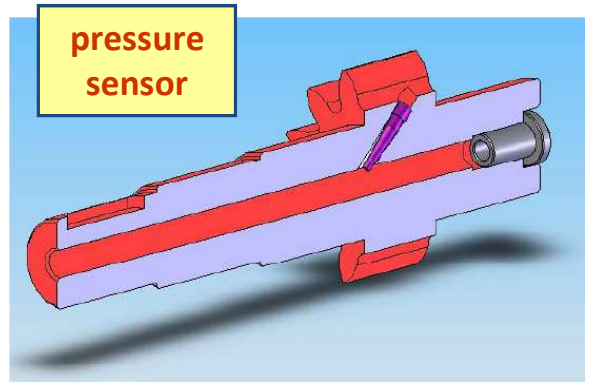

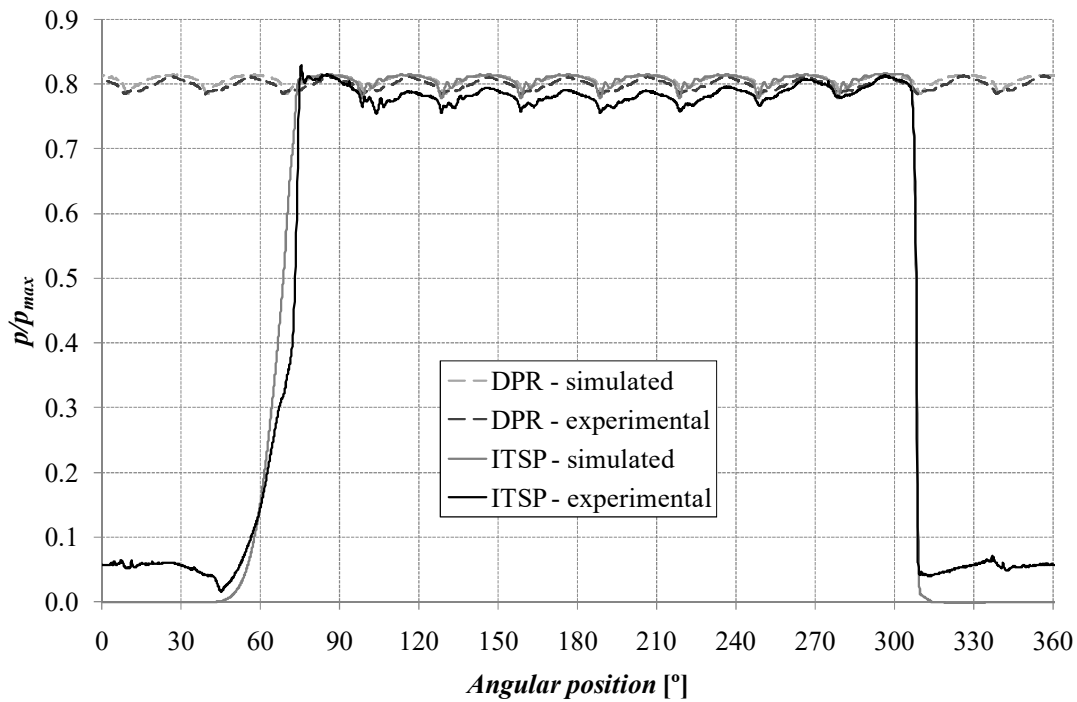

HYGESim (HYdraulic Gear machines Simulator)

Lubricating gaps and micro-motions

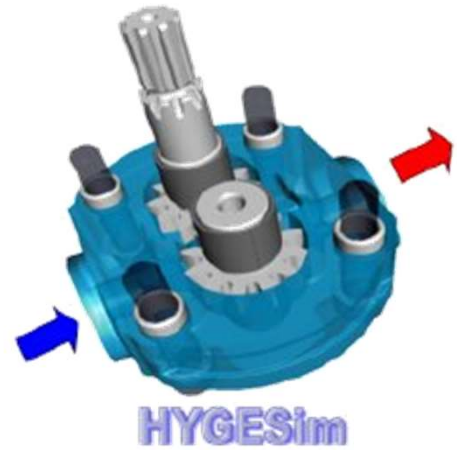

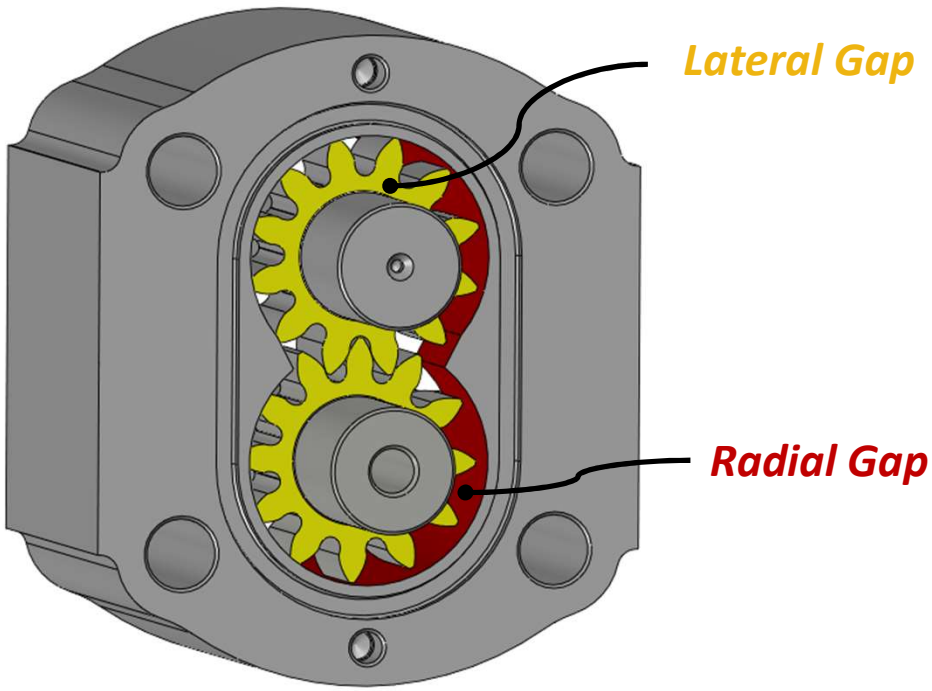

- ✓ Leakages
- ✓ Wear
- ✓ Fluid shear losses

HYGESim (HYdraulic Gear machines Simulator)

Radial gap and micro-motions

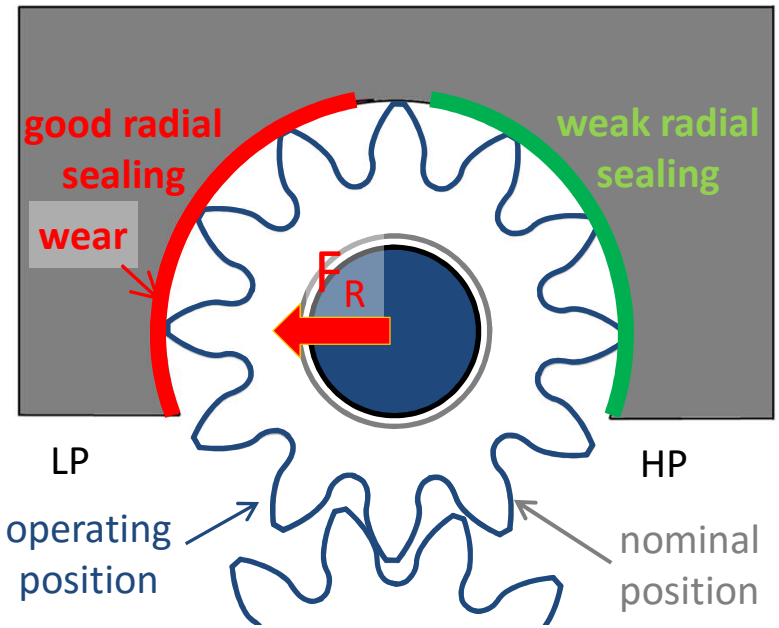

Constant radial gaps

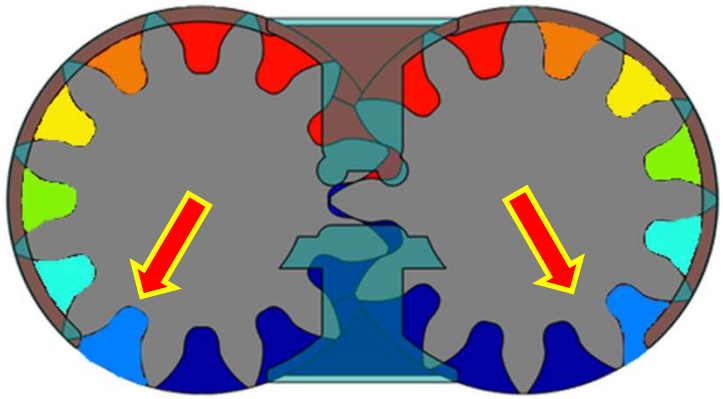

Variable radial gaps

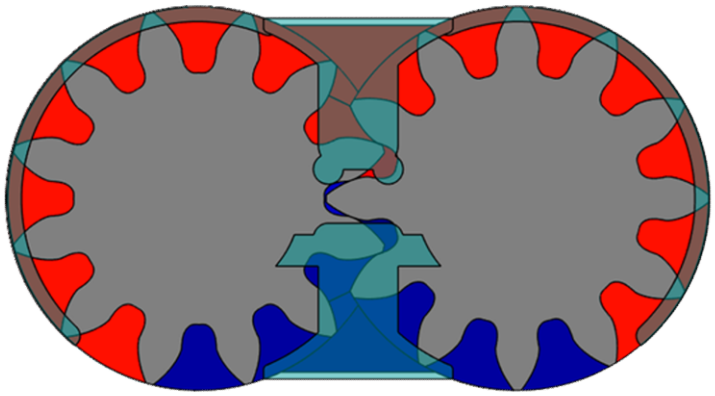

HYGESim (HYdraulic Gear machines Simulator)

Radial gap and micro-motions

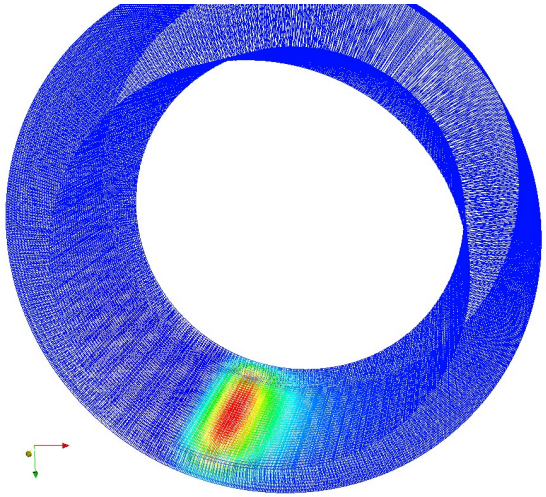

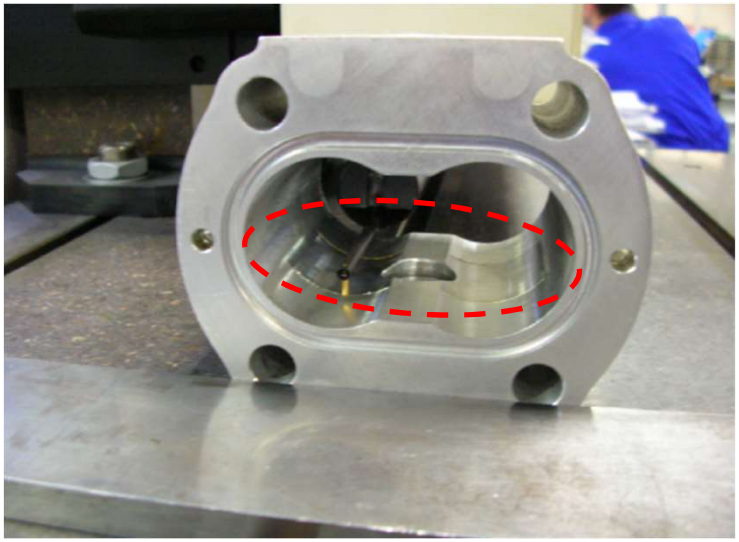

- ✓ Radial forces (pressure, contact force)
- ✓ Radial gaps
- ✓ Journal bearings
- ✓ Casing wear

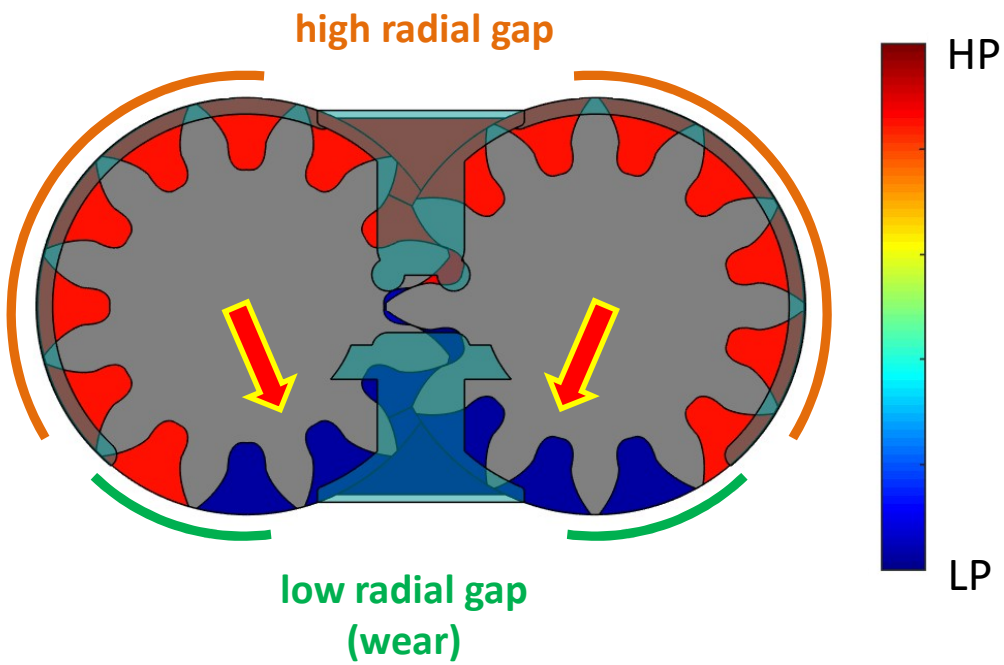

HYGESim (HYdraulic Gear machines Simulator)

Radial gap and micro-motions

vs.

- ✓ Radial forces (pressure, contact force)
- ✓ Radial gaps
- ✓ Journal bearings
- ✓ Casing wear

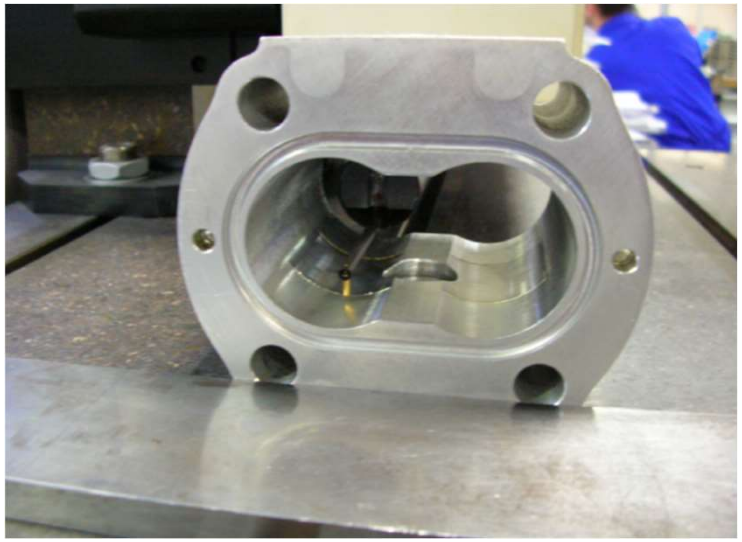

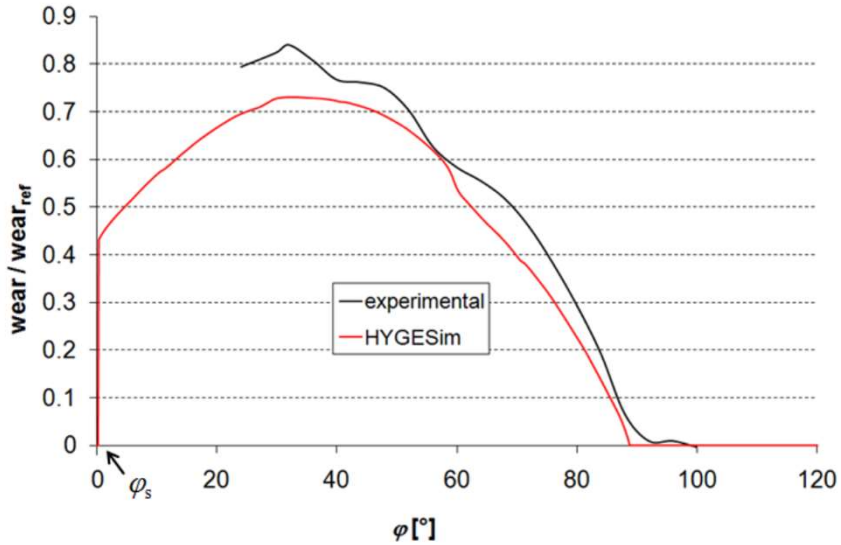

HYGESim (HYdraulic Gear machines Simulator)

Lateral gap and micro-motions

typical compensating areas

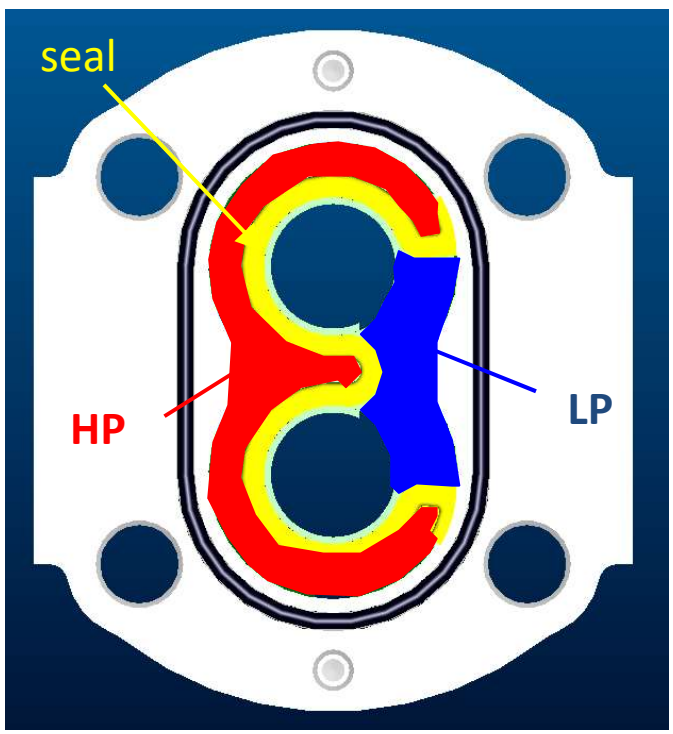

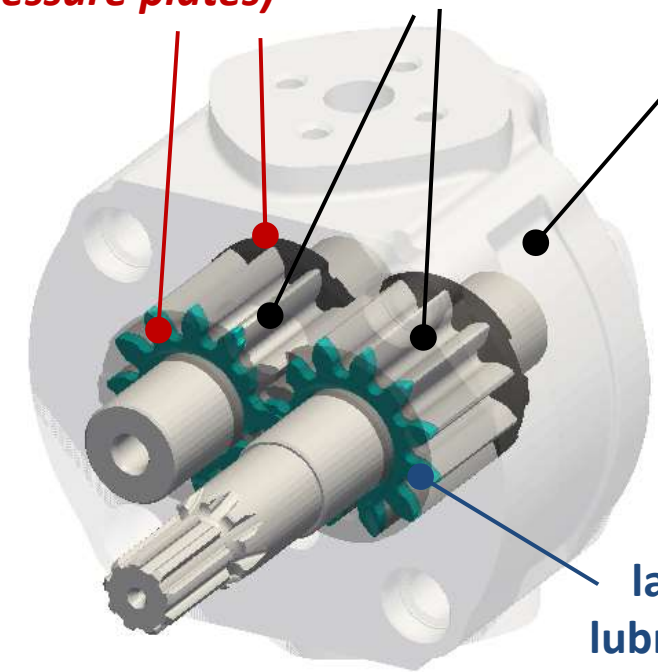

HYGESim - TEHD

Pressure & Velocity Field

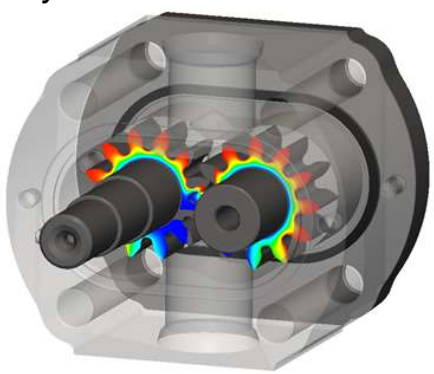

$$-\nabla\left(\frac{h^3}{12\mu}\nabla p\right)-\frac{V_g}{2}\nabla h+V_g\nabla h_b+\frac{\partial h}{\partial t}=0$$

Gap Flow Field

Fluid Mechanics

Reynolds Equation

$$\underbrace{\nabla.\left(-\frac{h^3}{12\mu}\nabla p\right)}_{\text{Diffusive (or static) term}}+\underbrace{\frac{V_g}{2}.\nabla h+\frac{\partial h}{\partial t}}_{\text{Hydrodynamic terms}}=0$$

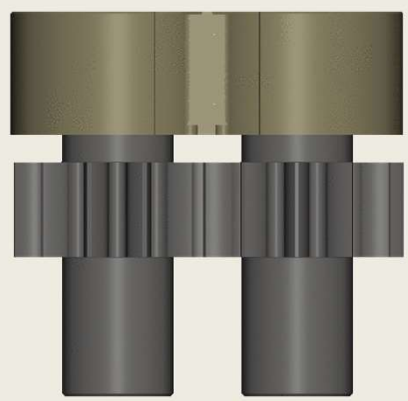

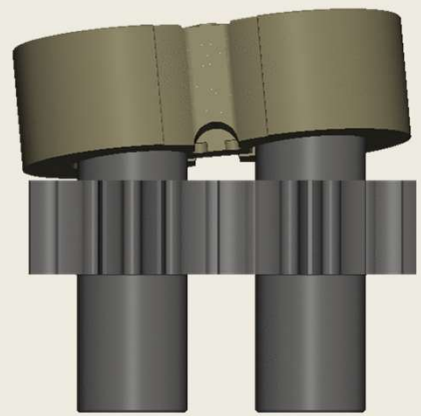

HYGESim - TEHD

Pressure & Velocity Field

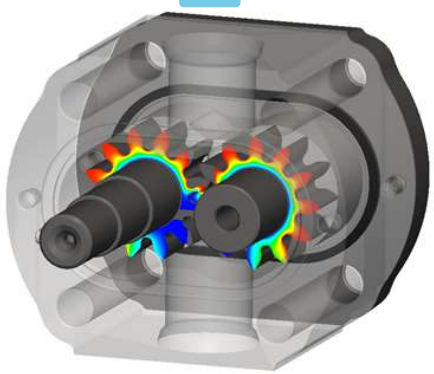

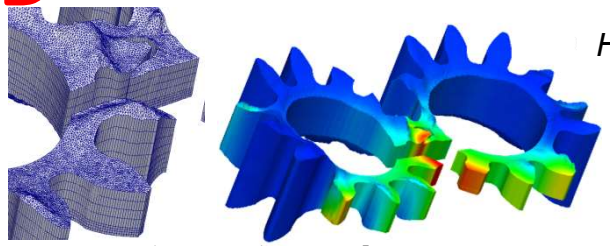

$$\nabla.(\rho C_p \mathbf{v} T) - \nabla.k\nabla T = \varphi$$

Gap Thermal Effects

Heat Transfer

Heat Fluxes

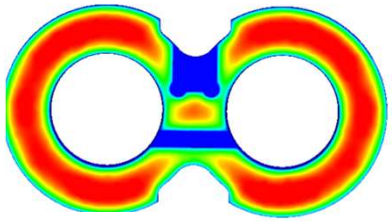

$$\nabla.(\mathbf{K_t}(\nabla T)) = 0 \quad \nabla.(\boldsymbol{\sigma}) + \mathbf{b} = 0$$

Solid Thermo-Elastic Deformation

Heat Transfer/ Continuum mechanics

Thermo-Elastic Deformation

$$-\nabla\left(\frac{h^3}{12\mu}\nabla p\right) - \frac{V_g}{2}\nabla h + V_g \nabla h_b + \frac{\partial h}{\partial t} = 0$$

Gap Flow Field

Fluid Mechanics

Fluid pressure & Squeeze velocities

Fluid pressure & Solid deformation

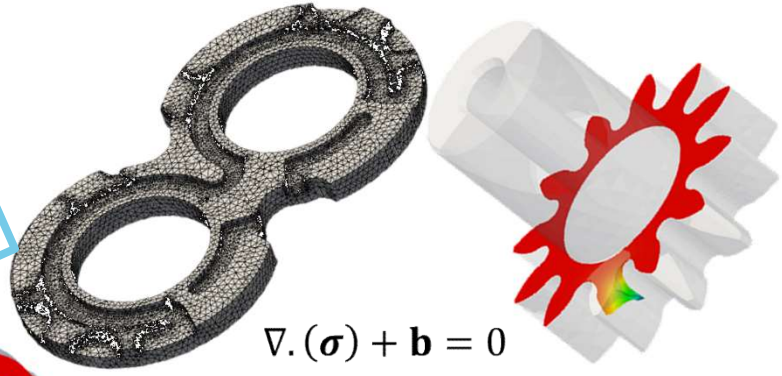

$$\nabla.(\boldsymbol{\sigma}) + \mathbf{b} = 0$$

Solid Elastic Deformation

Continuum Mechanics

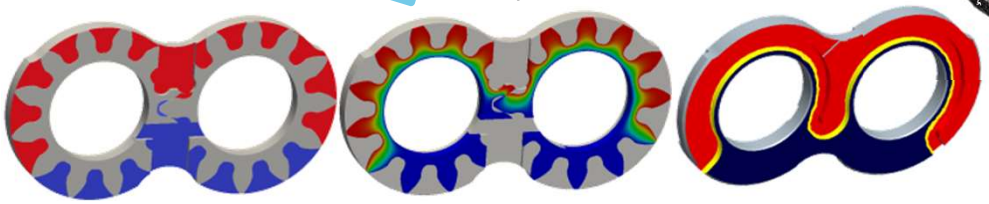

Force Balance and Solid Components Micro-Motion

Rigid body Dynamics

HYGESim - TEHD

Bushing Micro-Motion+
Film Thickness +
Film Pressure

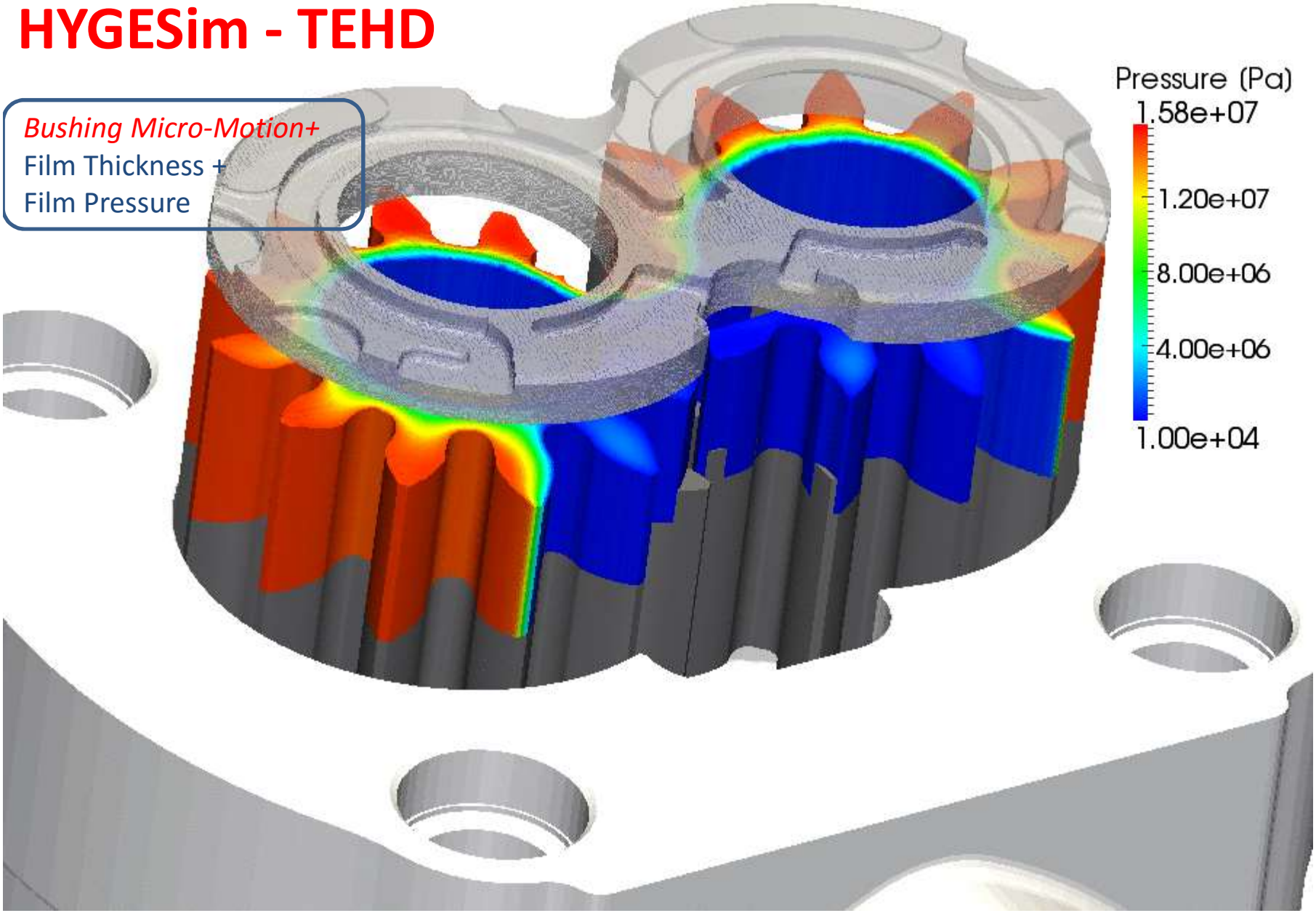

HYGESim - TEHD

Qualitative comparisons

VS.

Film thickness prediction: 11cc EGM

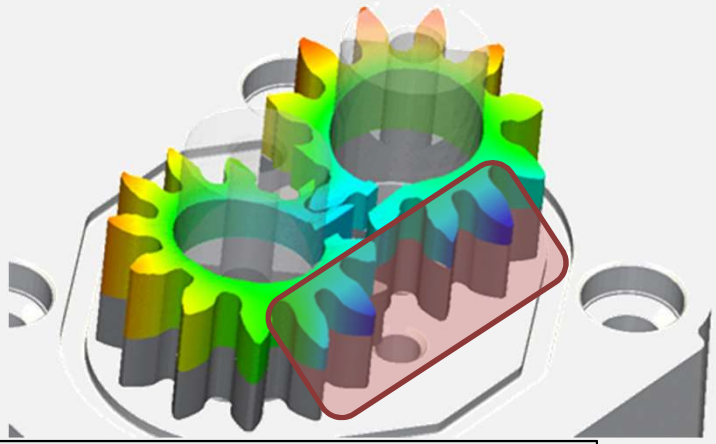

Bushing from test pump after operation

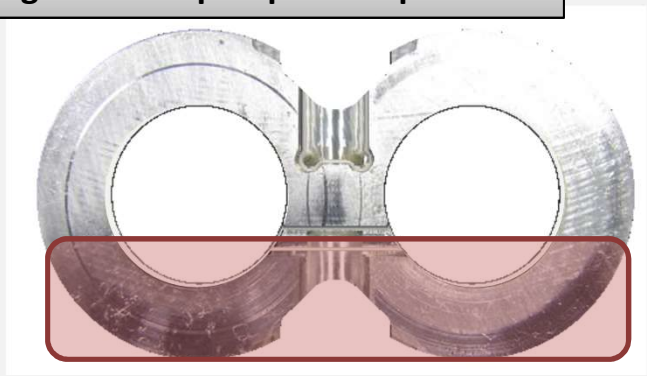

Film thickness prediction: 25cc EGM

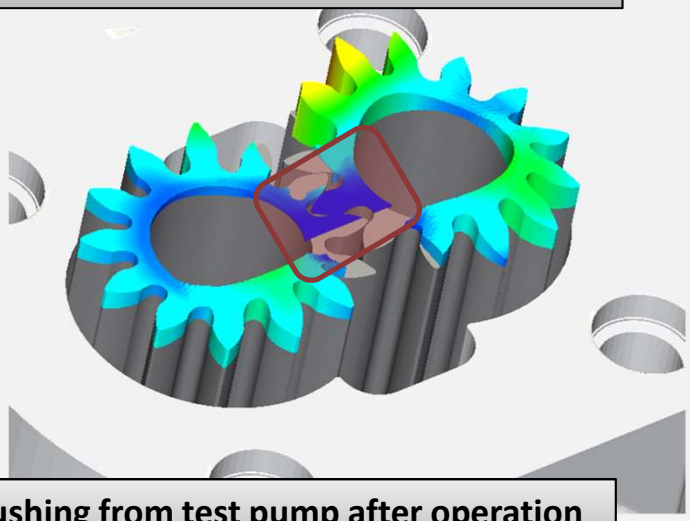

Bushing from test pump after operation

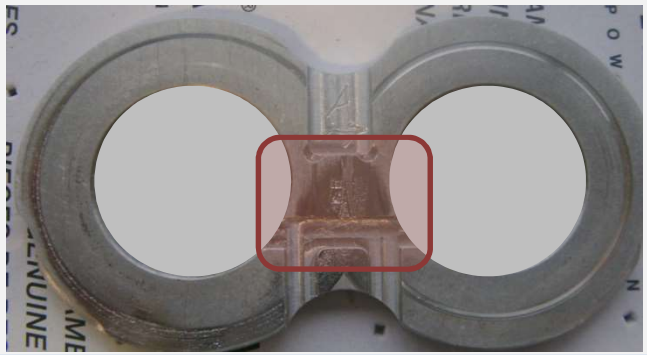

HYGESim - TEHD

Film thickness measurements

vs.

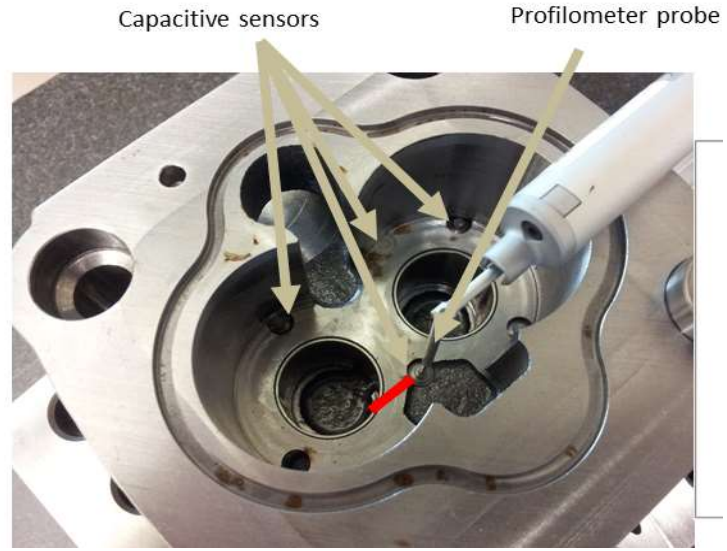

Prototype + Capacitive Sensors

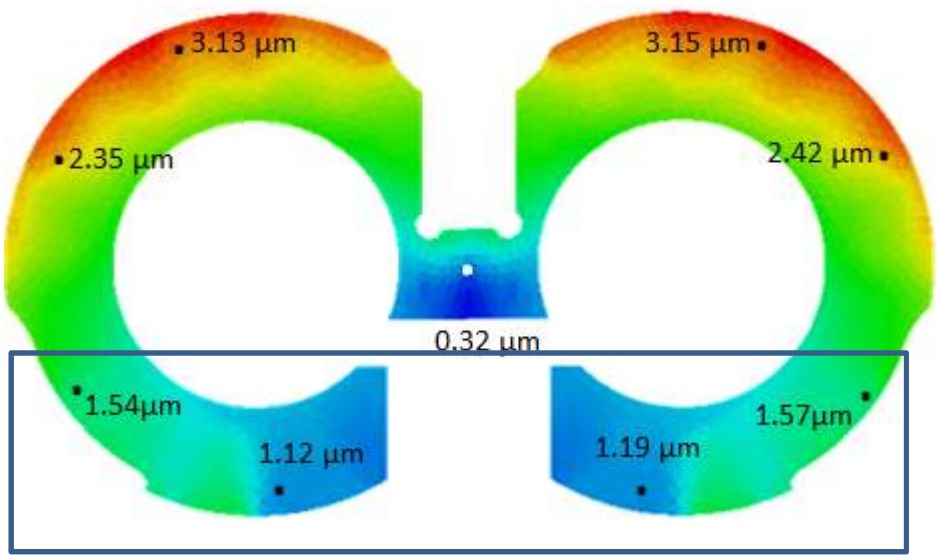

Simulation

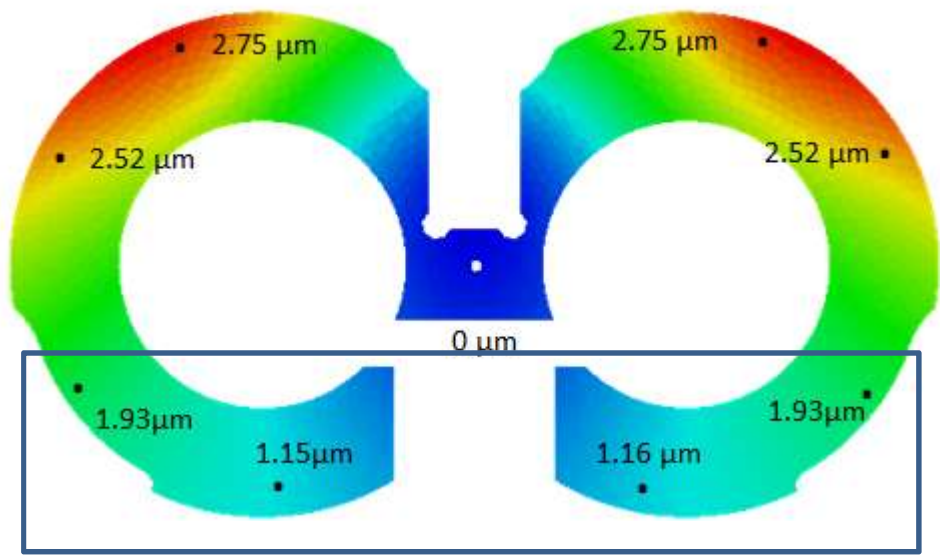

Experimental

HYGESim

Hydromechanical efficiency

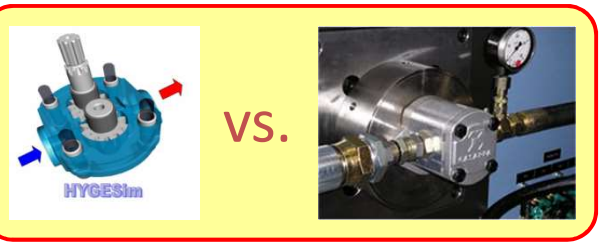

Experimental Measurements

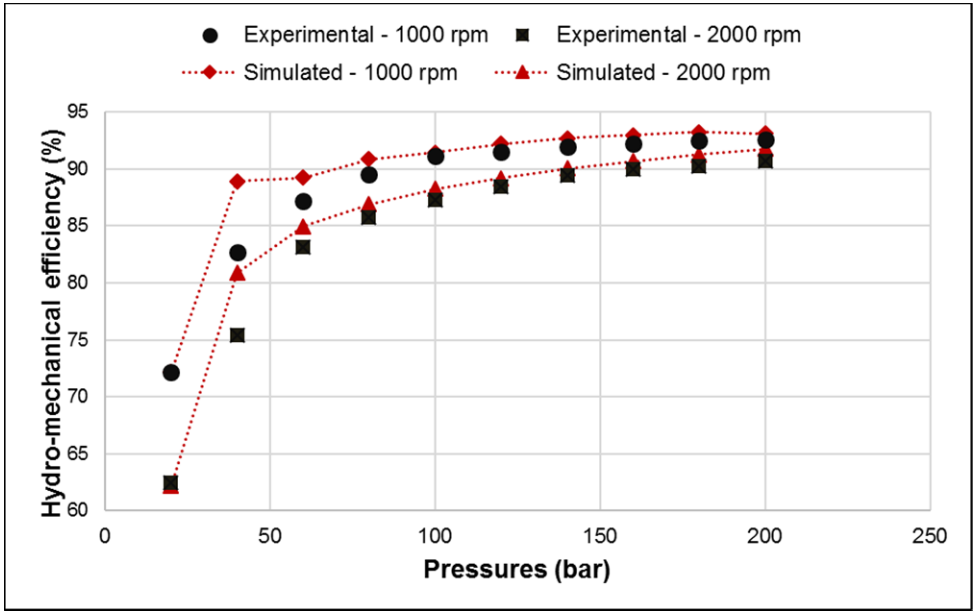

- ✓ Losses in the radial gap
- ✓ Losses in the lateral gap
- ✓ Journal bearing losses
- ✓ Contact losses
- ✓ Turbulent losses

Virtual Prototyping

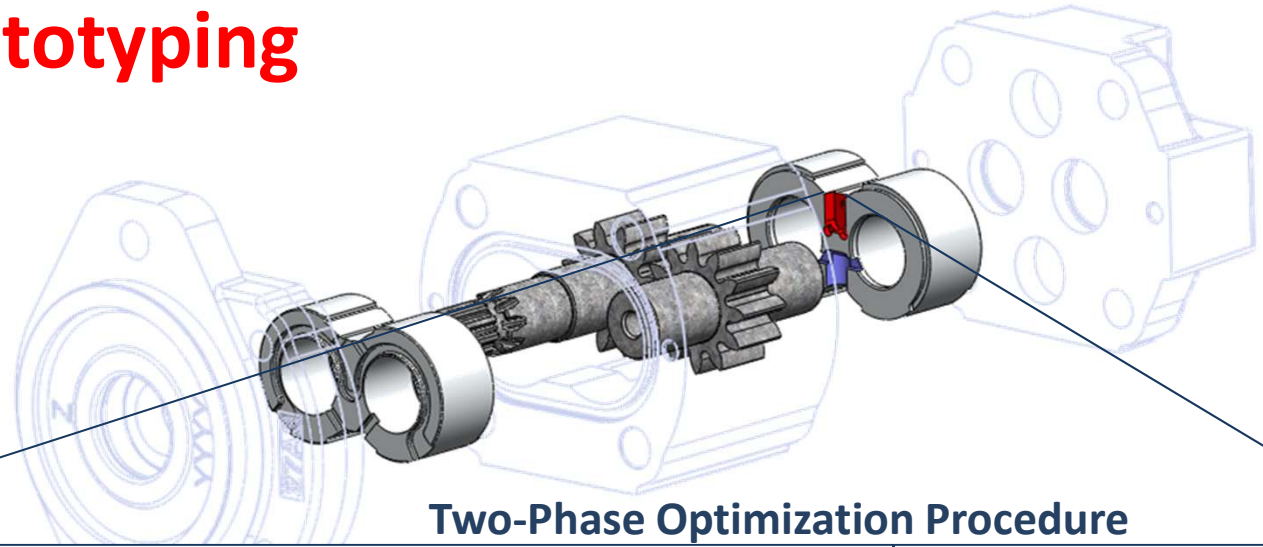

Two-Phase Optimization Procedure

PHASE I – Area connection determination

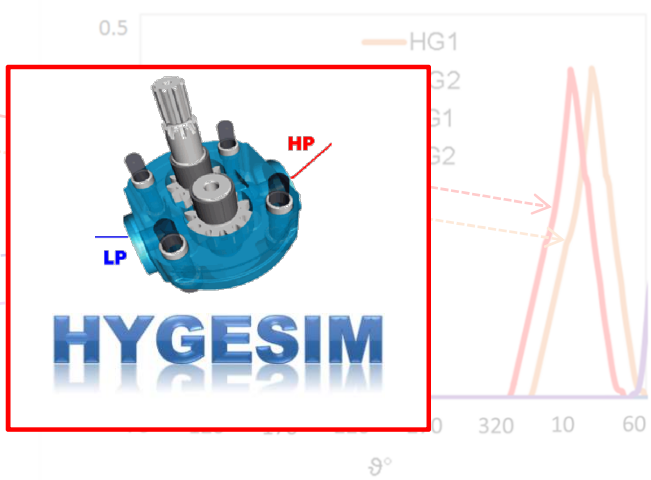

Finds the optimal set of area connections as a function of the angular rotation of the gears

PHASE II – Groove realization

Objective Functions

- pressure pulsations
- localized cavitation
- volumetric efficiency
- int. pressure peaks

Finds the shape of the grooves that perform like the optimal area curves found in Phase I

Virtual Prototyping

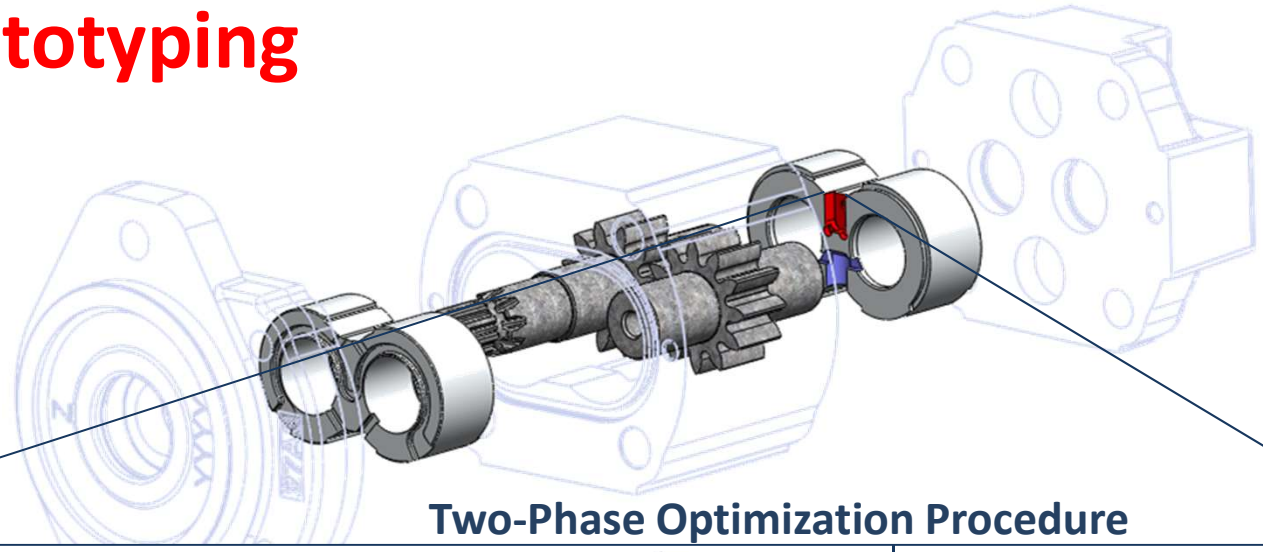

Two-Phase Optimization Procedure

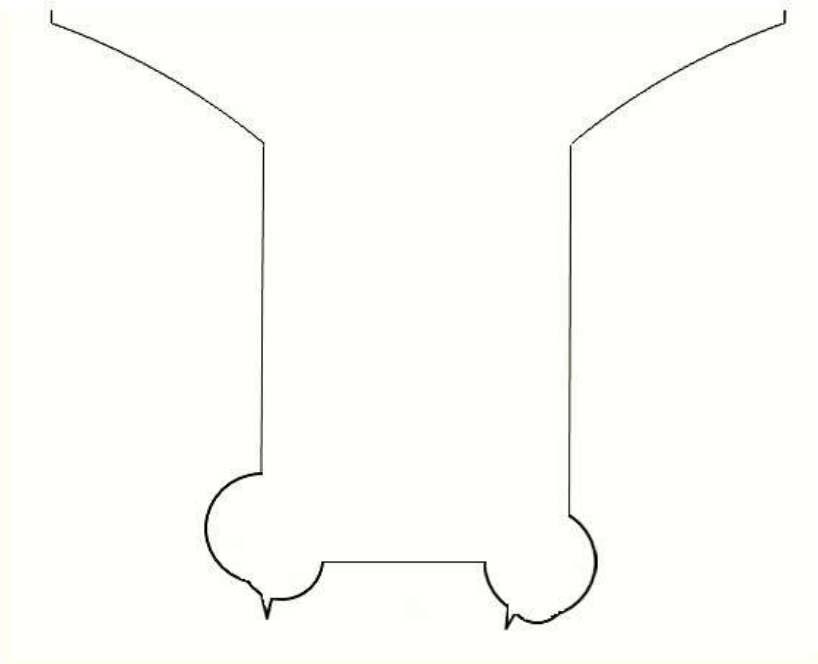

PHASE II – Groove realization

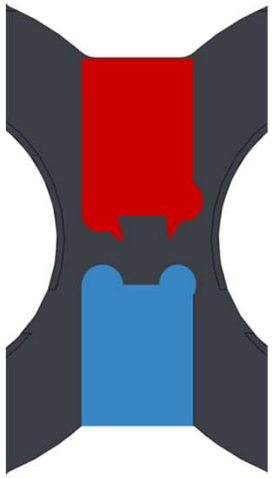

Finds the shape of the grooves that perform like the optimal area curves found in Phase I

Virtual Prototyping

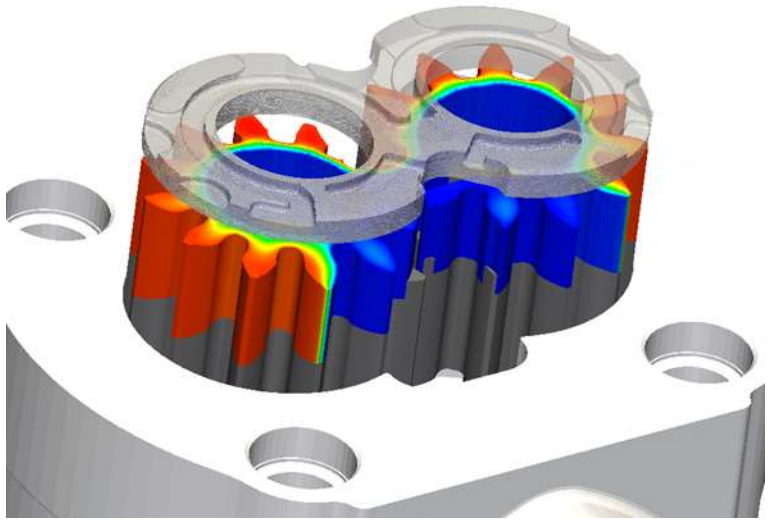

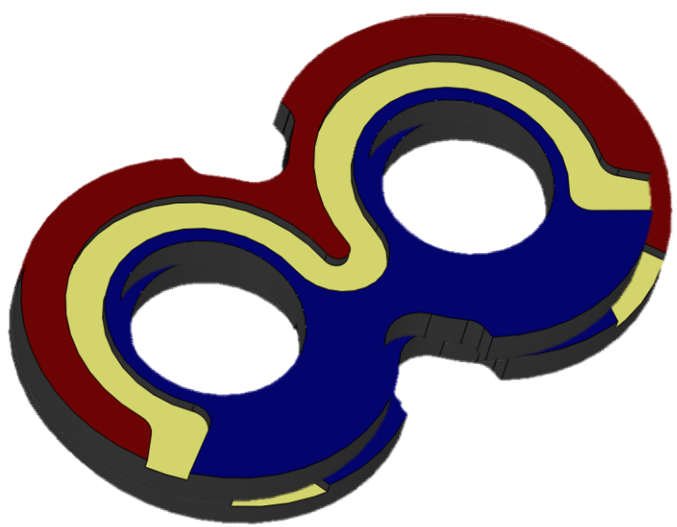

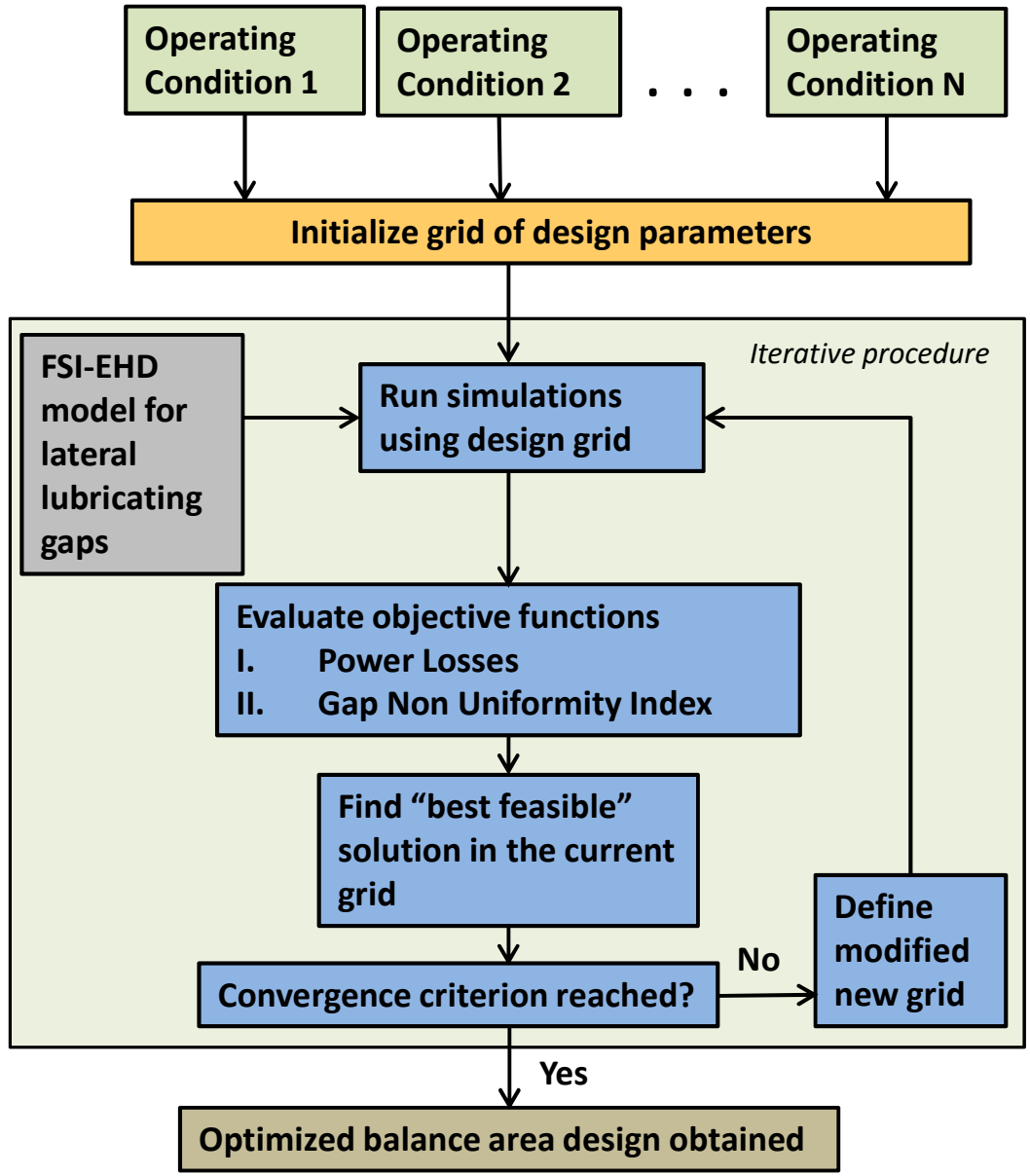

Compact EH Actuator

Miniature pump

E

Pu

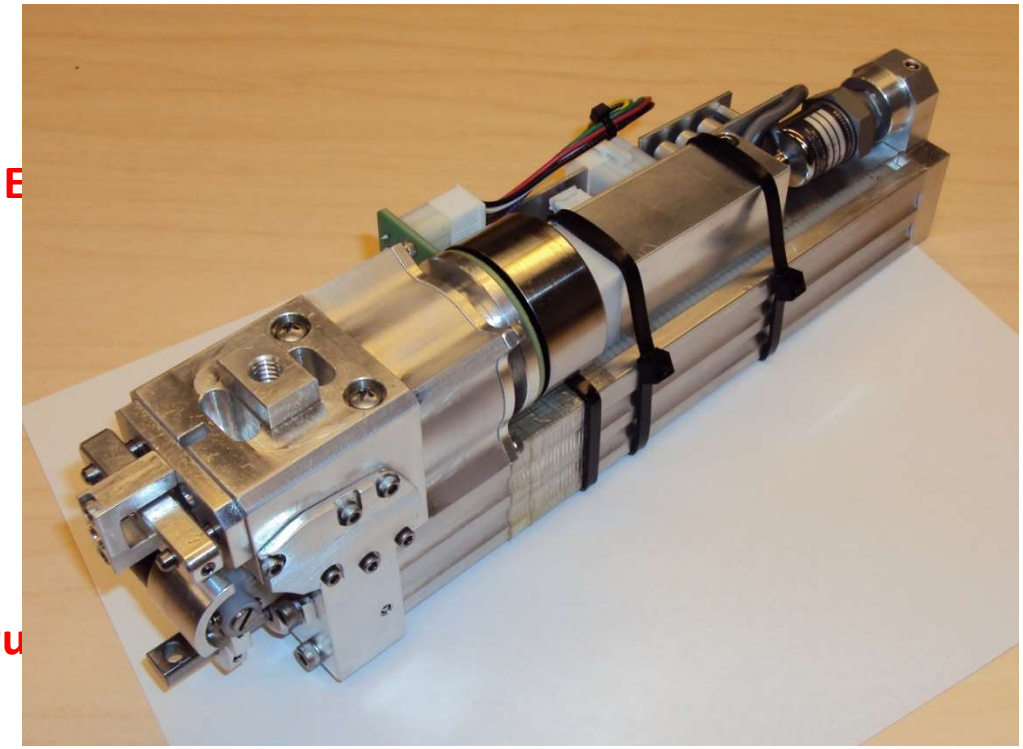

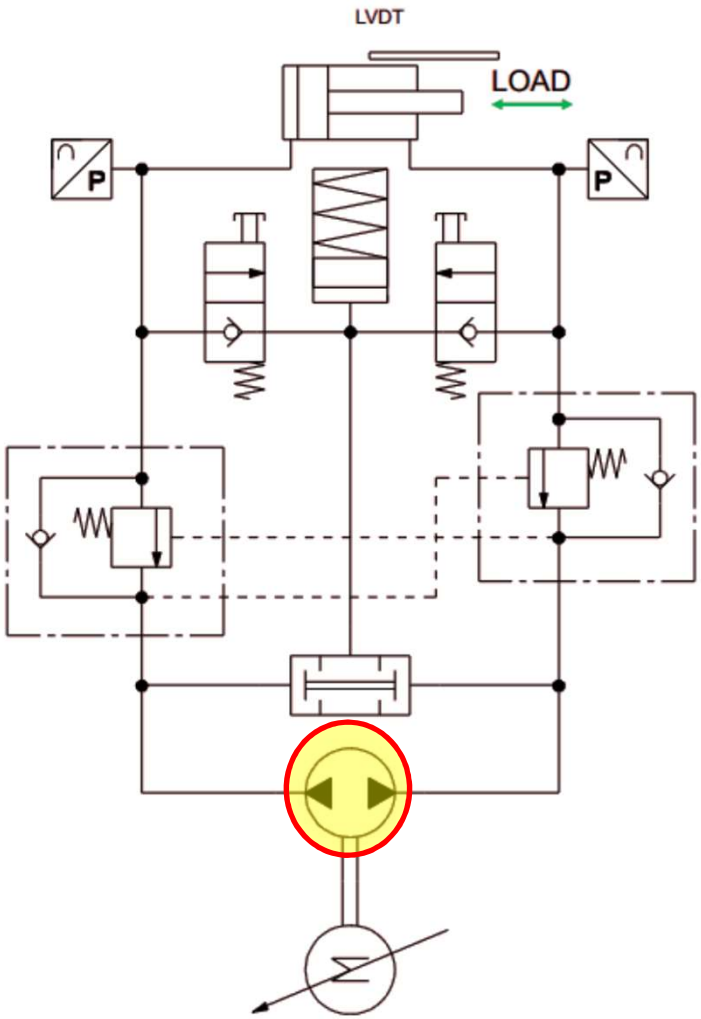

High efficient EHA system layout

Virtual Prototyping

Miniature pump

Details on the miniature gear pump (≈0.1 cm^3/rev)

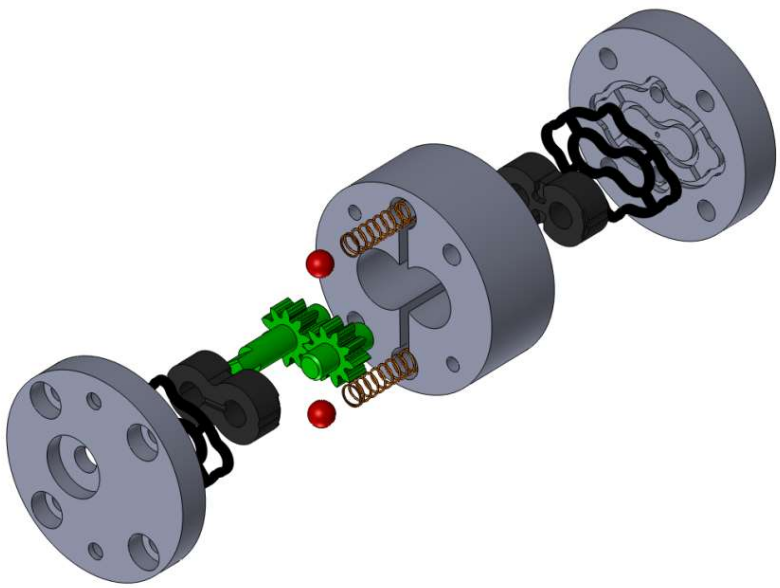

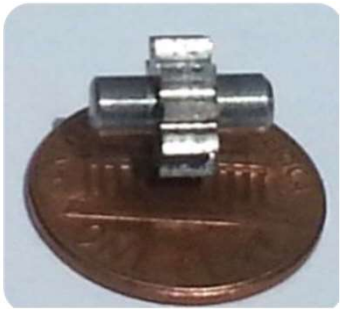

**Patent filed*

Surface shaping

Wedged Gears

Linear wedge on individual gear teeth:

Max. wedge depth ≈ microns

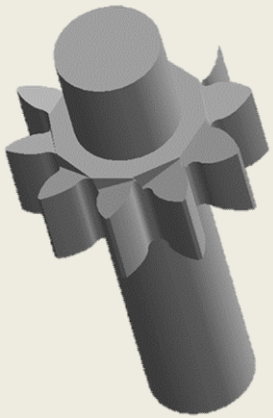

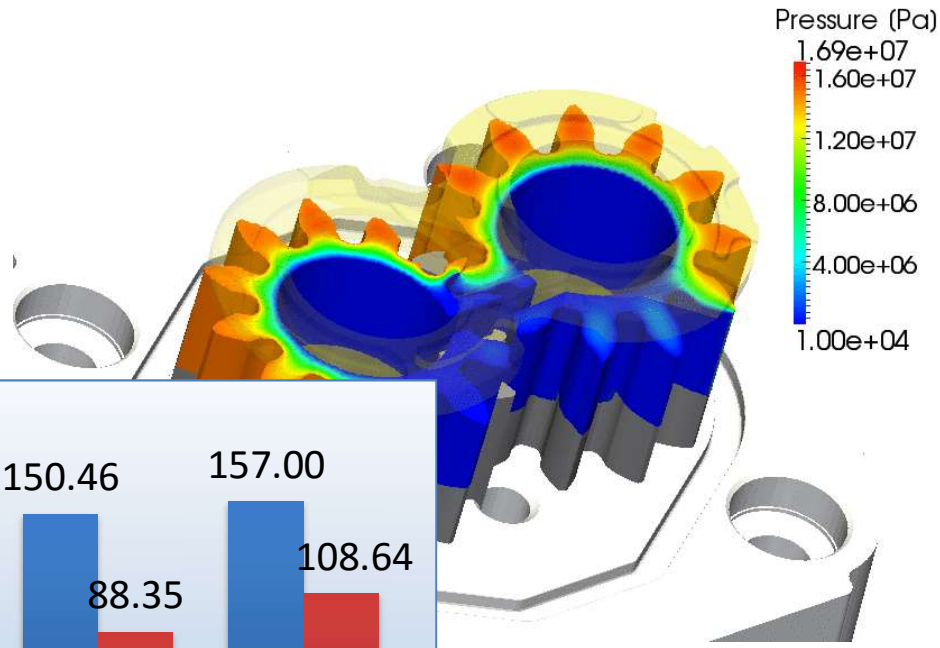

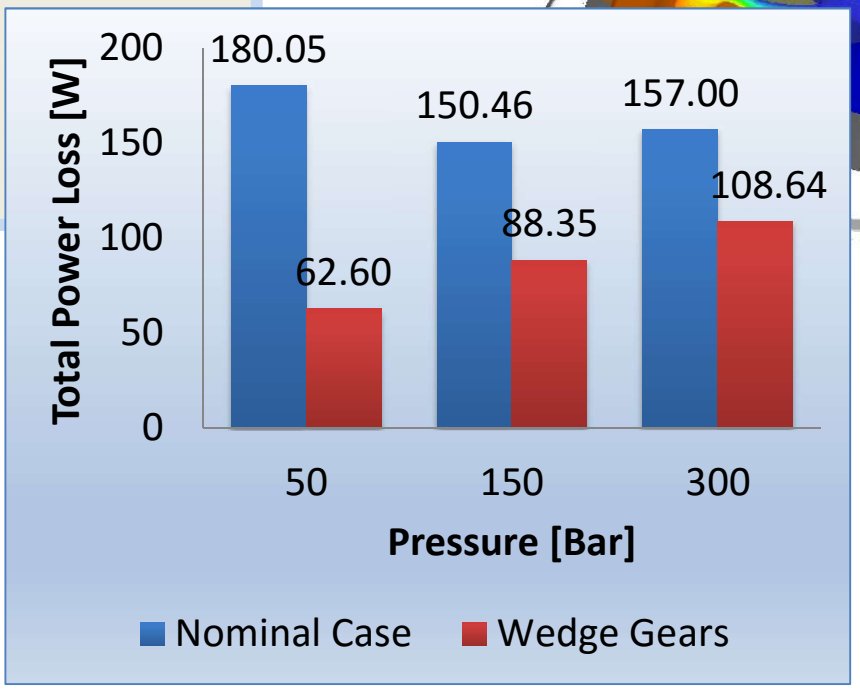

**Patent filed*

Surface shaping

Wedged Gears

Linear wedge on individual gear teeth:

Max. wedge depth ≈ microns

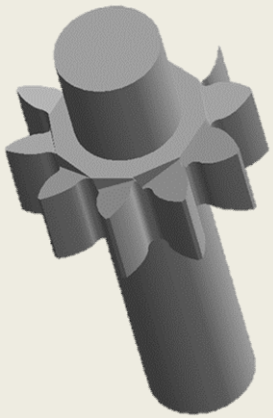

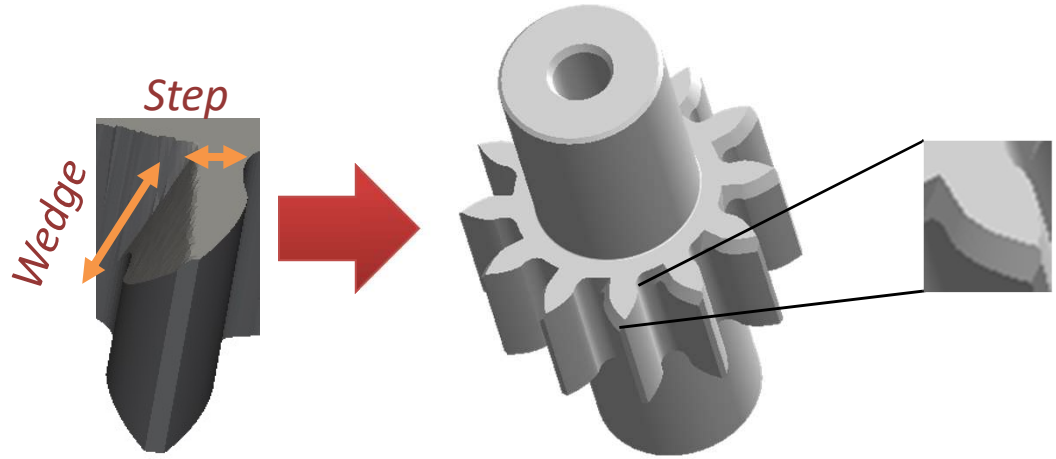

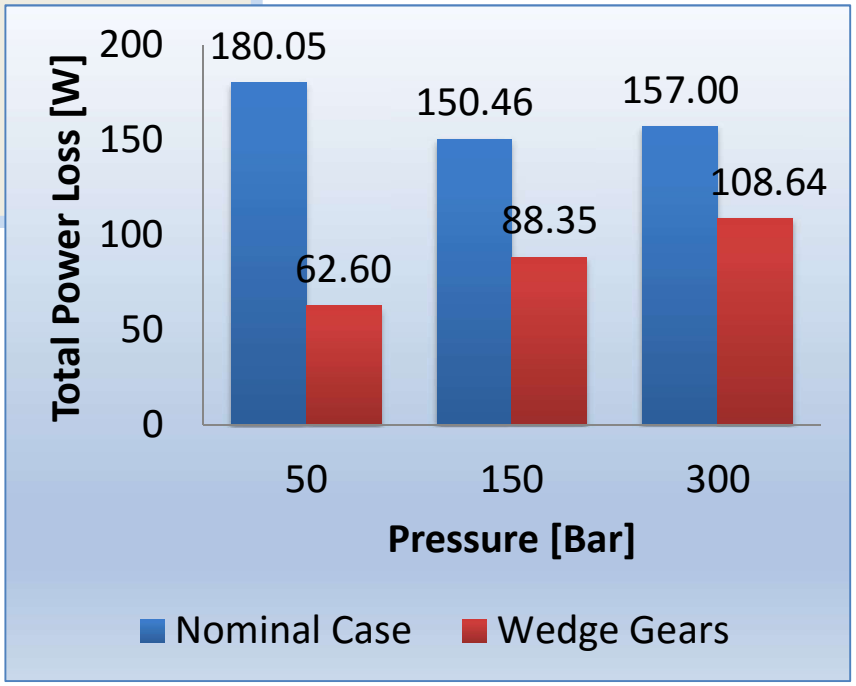

*Patent filed

Variable Displacement Gear Pump

Variable timing concept

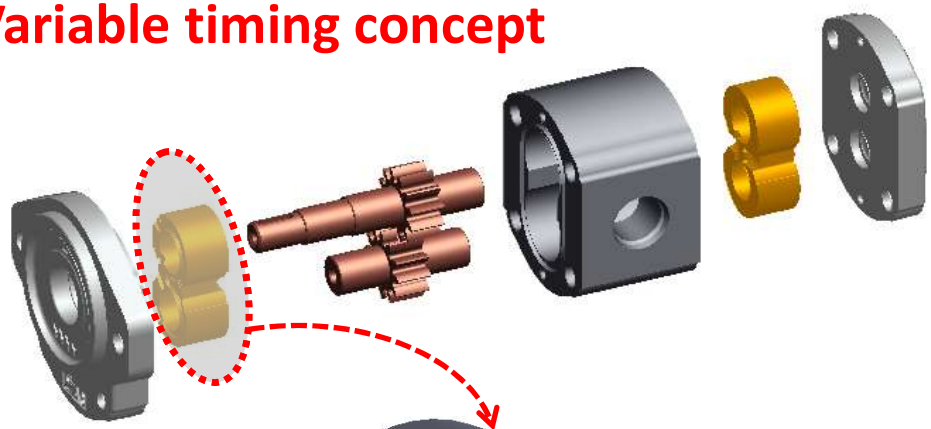

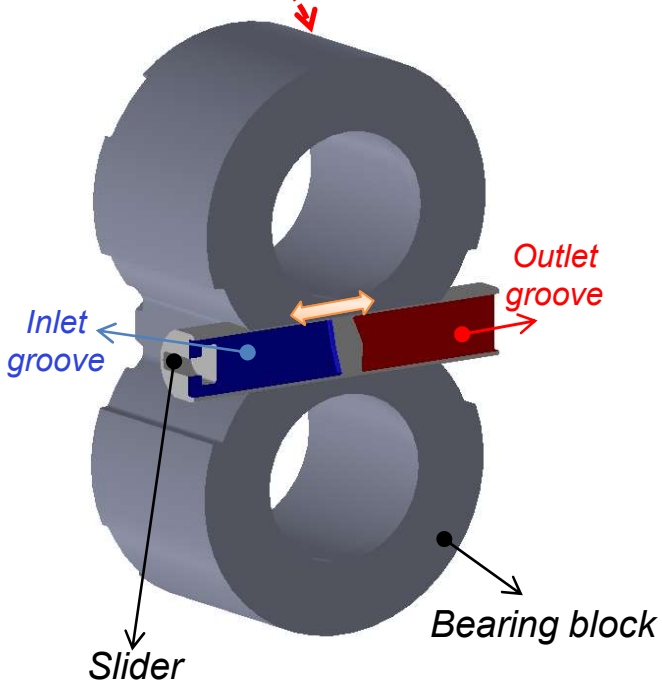

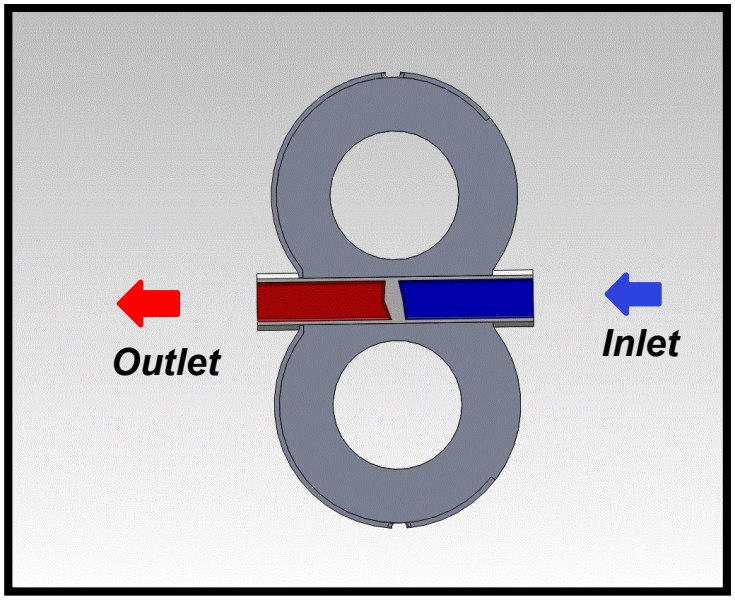

Variable Displacement Gear Pump

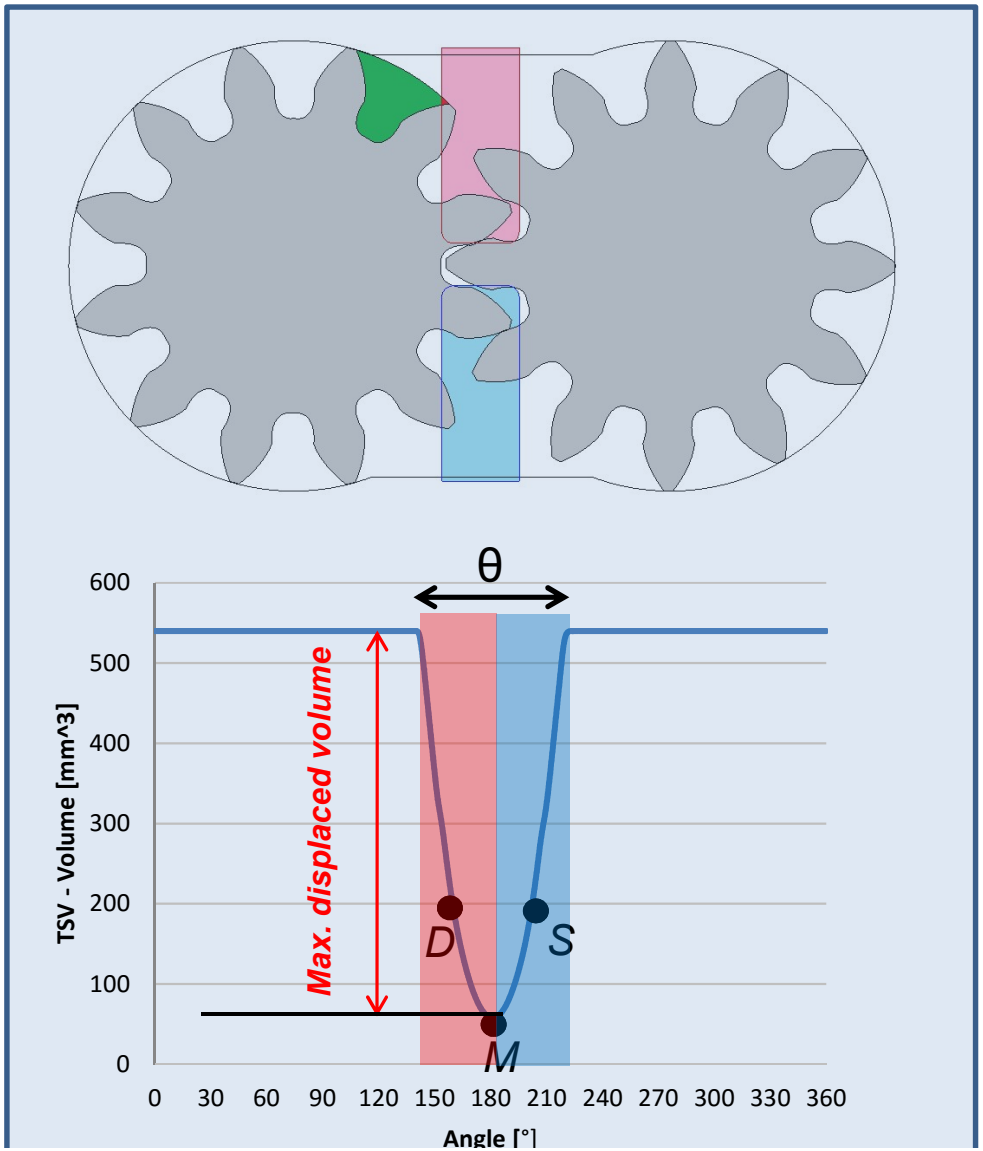

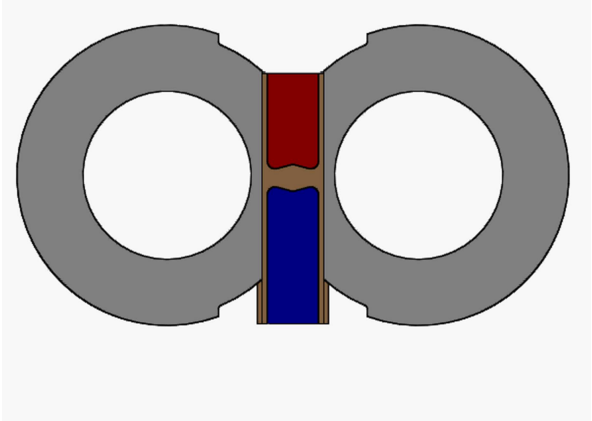

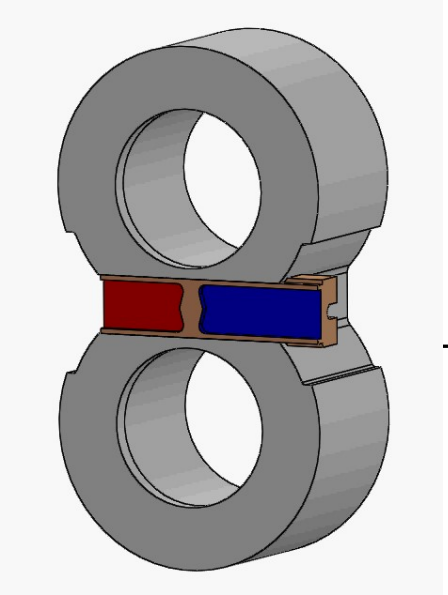

Variable Displacement Gear Pump

Past attempts

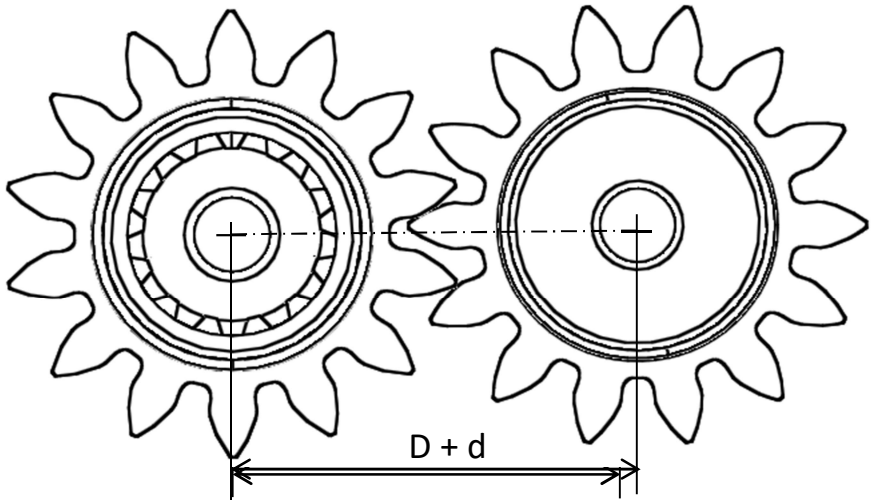

**CN85109203, 1987*
GB968998, 1960

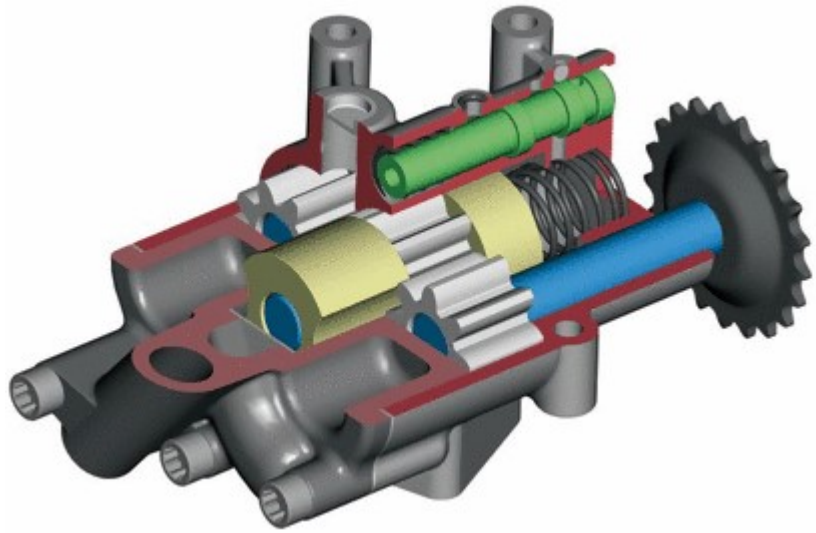

**MTZ worldwide eMagazine, Variable Flow Spur Gear Oil Pump for utility vehicle engines*

**US2001024618, 2001*
EP0478514, 1992
US2008044308, 2008
US2002104313, 2002

Methods of varying displacement

- *Vary the inter-axis distance (radial)*
- *Vary the effective meshing length of the gears (axial)*

Variable Displacement Gear Pump

Prototype

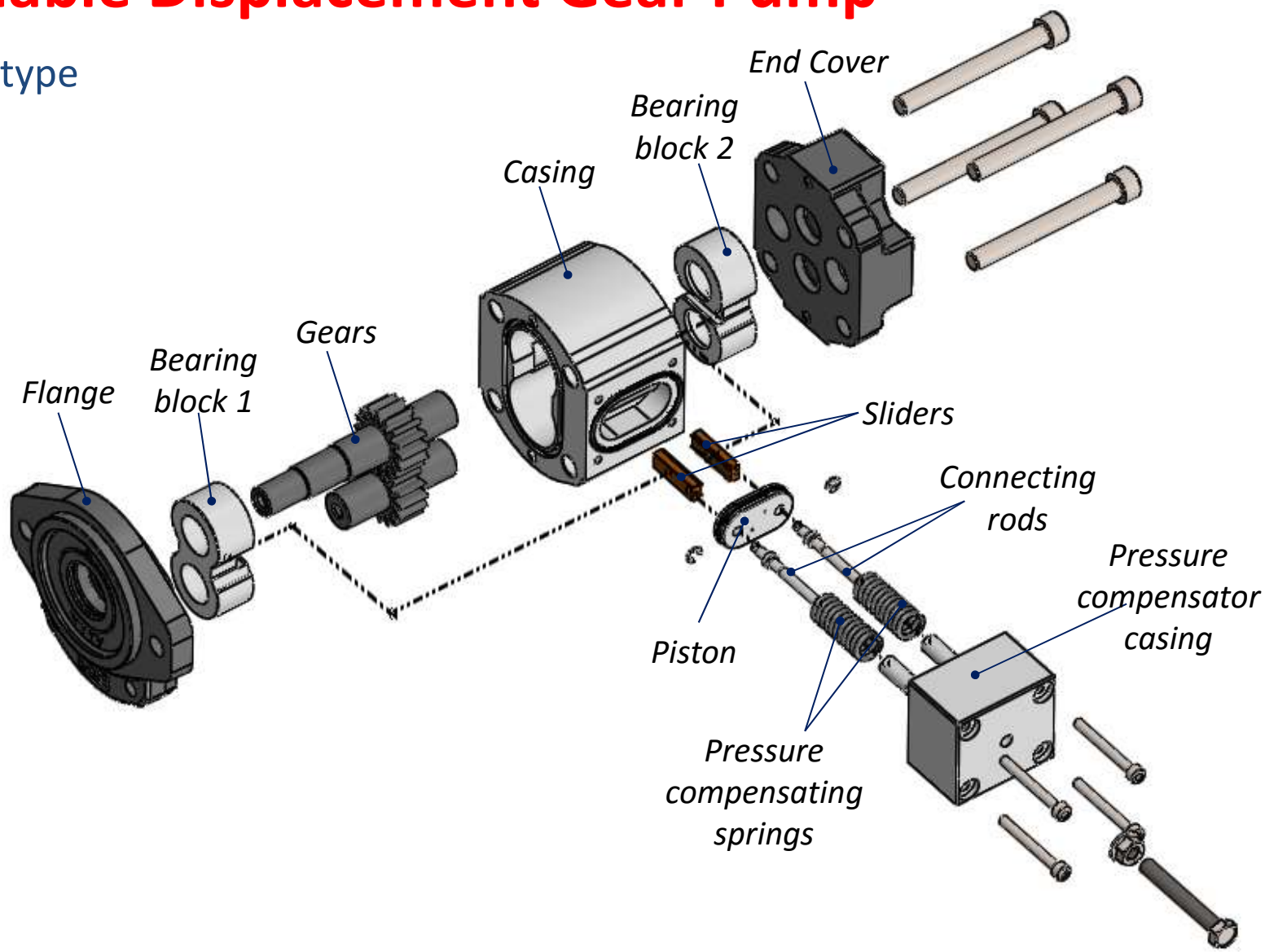

Variable Displacement Gear Pump

Prototype

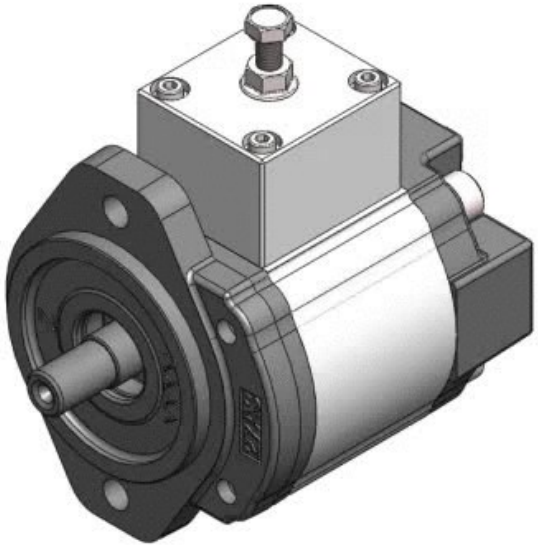

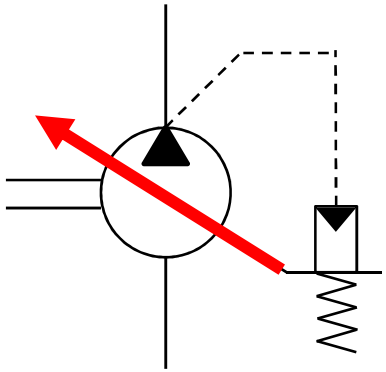

*Patent filed

Noise prediction & reduction

How noise is generated?

- ✓ Fluid borne noise

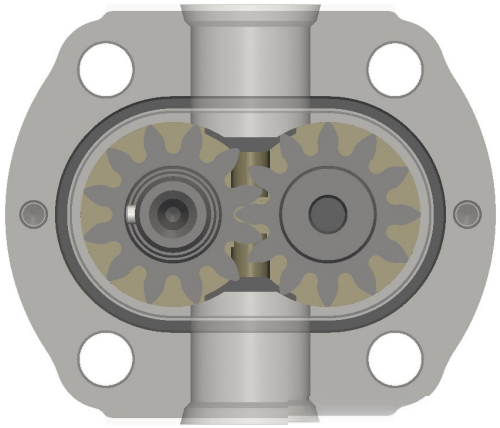

- ✓ Structure borne noise

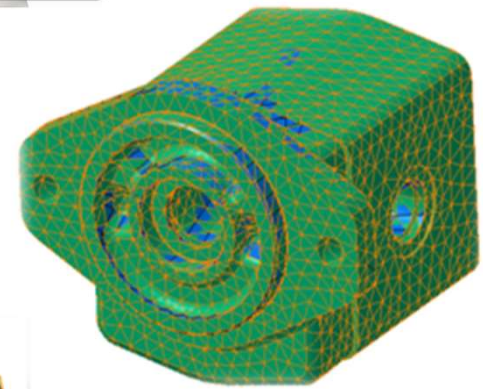

- ✓ Airborne noise

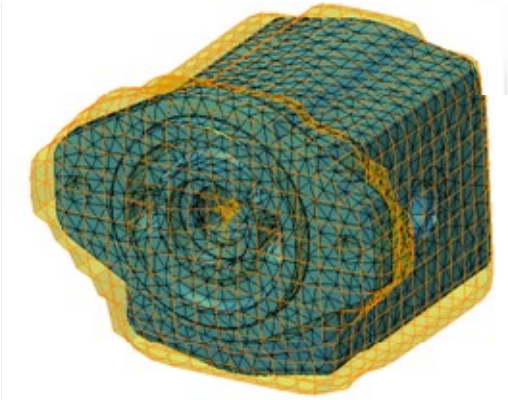

Noise prediction & reduction

HYGESim Acoustic

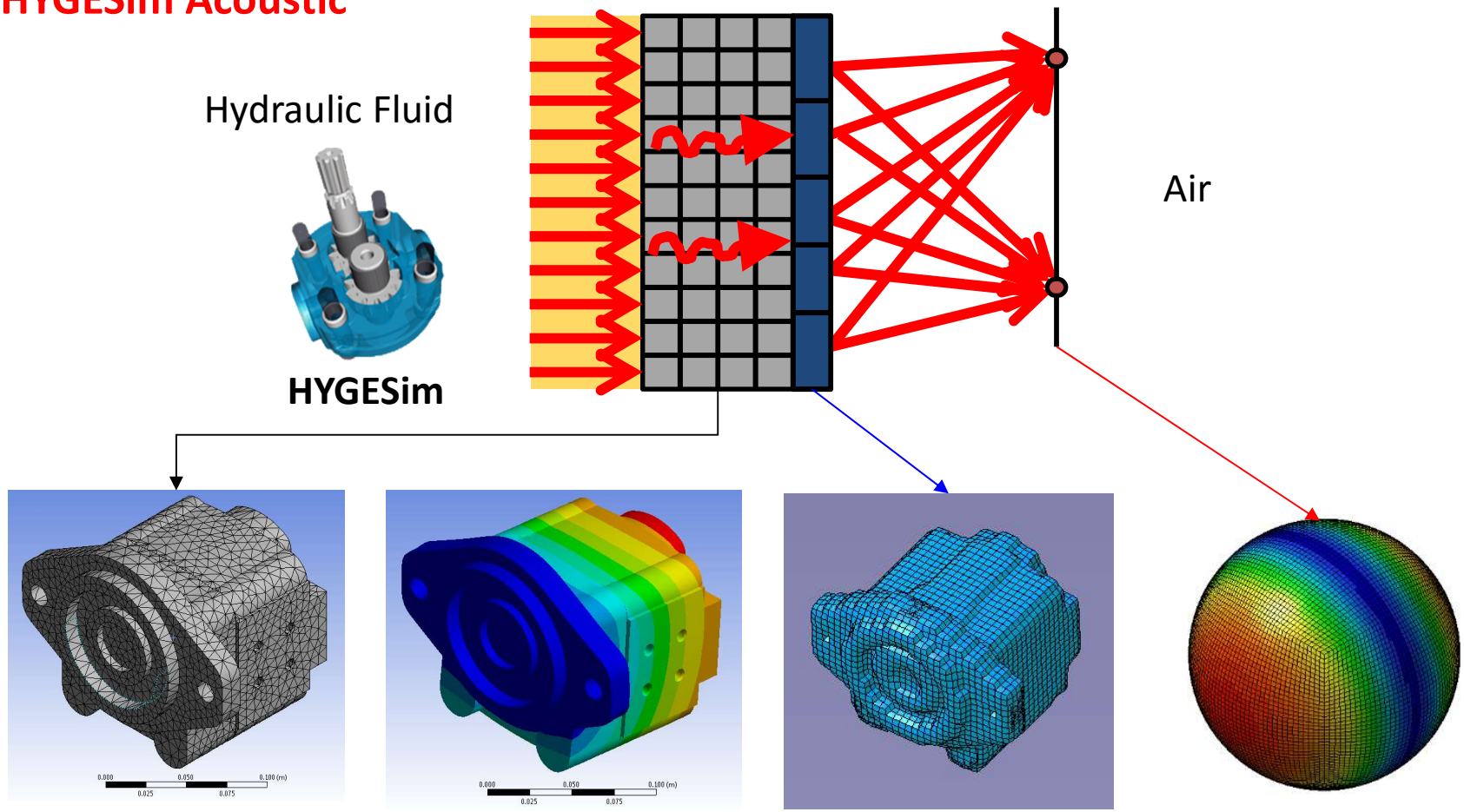

FEM -Structural Mesh

Modal Analysis

BEM – Wrapper Mesh

Field Point Mesh

Noise prediction & reduction

Numerical analysis

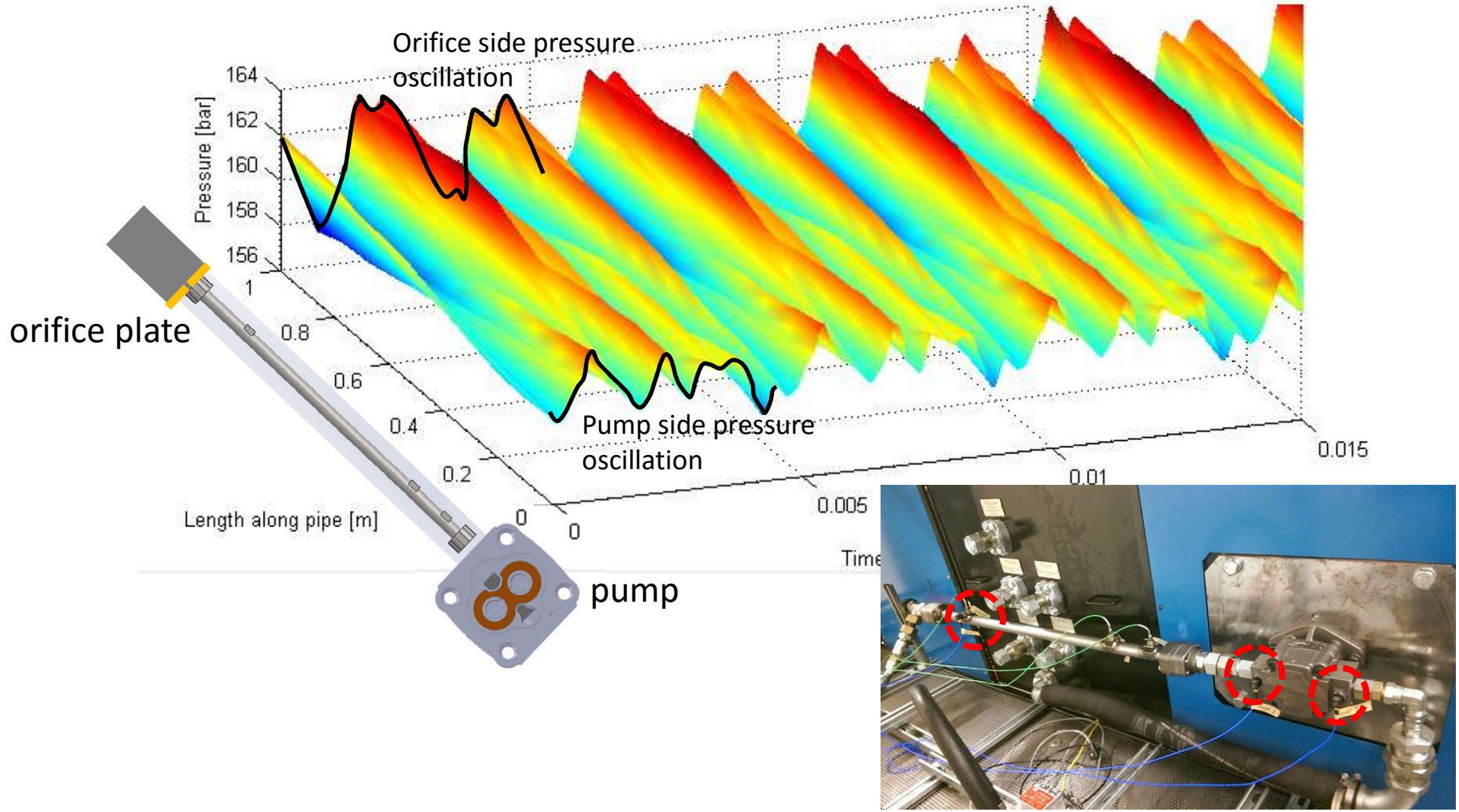

Thank you !

Andrea Vacca

Advanced Modeling Techniques and Innovations in External Gear Pumps